SENCOR®

Let's live!

Wireless Bluetooth Loudspeaker

IMPERIAL BTS 500

USER'S MANUAL

EN

THANK YOU FOR YOUR DECISION TO PURCHASE THIS PRODUCT.
PLEASE, READ THE ENTIRE USER'S MANUAL BEFORE INSTALLING AND USING THE DEVICE - IT CONTAINS IMPORTANT INFORMATION FOR THE OPTIMAL AND SAFE USE OF ALL OF ITS FUNCTIONS AND FEATURES.
KEEP THE USER'S MANUAL IN CASE OF FUTURE NEED.

Contents

Important notices 2
Repairs and maintenance 3
Remote control and batteries 3
1. Contents of the transport cardboard box 4
2. Description of the loudspeaker 5
Front panel 5
Rear panel 6
3. Remote control 7
Functions of the remote control buttons 7
4. Connections 8
4.1 AUX IN 8
4.2 BLUETOOTH connection 8
5. Troubleshooting 9
6. Technical specifications 10

Copyright © 2013, Fast ČR, a. s.

Important notices

- Read this user's manual. Follow the instructions contained in this user's manual.
- Heed all warnings.
- Adhere to all instructions.
- Use only accessories determined by the manufacturer.
- An open flame must not be placed on the product, e.g. burning candle.
- Use the device in a temperate climate zone.
- Neither the manufacturer nor the seller of the device under no condition takes responsibility for any direct or indirect damages caused by not adhering to instructions for installation, setup, use, service or cleaning of this device as described in this user's manual.
- Protect the device against being knocked, dropped, hit, shaken and against vibrations, humidity and dust.
- Before allowing children to use the device, they must be appropriately to their age, informed about the correct and safe use of the device.
- Leave free space on all sides of the device, necessary for proper air circulation. This removes the heat created during operation. Covering the ventilation openings of the device's case creates a risk of overheating or damaging the device. It is necessary to ensure that the ventilation openings are not blocked, e.g. by a newspaper, table cloth, curtain, etc. Follow the installation instructions in the user's manual.
- Do not install the device in direct sunlight or near sources of heat, such as heaters, heat exchangers, stoves or other appliances (including amplifiers) producing heat. High temperatures significantly reduce the lifetime of electronic components in the device. Do not use or leave the device in the vicinity of an open fire.
- The device must not be exposed to dripping or running water and objects filled with water must not be placed on it, e.g. vases. Protect the device against rain, spray or contact with any other liquid, do not leave or install the device outdoors. Do not use the device outdoors. Not adhering to these instructions creates a risk of electrical shock or fire hazard.
- Do not use this device near water.
- Do not try to circumvent the polarised power plug safety feature. If the power plug cannot be inserted into your power socket, contact a qualified electrician to replace the old type of power socket.
- Before connecting the device into a power socket, check that the voltage in your power socket corresponds to the voltage on the rating label of the device or on its power adapter.
- Make sure that the power cord is not stepped on or compressed, particularly near the power plug, power socket and at the point where it exits the device or the adapter. The power plug (adapter) is used as a disconnection device and must be easily accessible.
- Remember to always disconnect the power plug (adapter) from the power socket before disconnecting the power cable from the back side of the device.
- Disconnect the device from the power socket during storms or if you will not be using it for a longer time.

Copyright © 2013, Fast ČR, a. s.

- Protect the device against being knocked, dropped, hit, shaken and against vibrations, humidity and dust.

Repairs and maintenance

- To prevent risk of injury through electric shock or the creation of a fire, do not take the device out of the case – there are no parts inside the case repairable or adjustable by the user without relevant equipment and qualifications. Should the device require adjustment or repair, contact a professional service centre.
- In the case of any unusual events occurring during the use of the device, e.g. if there is a distinct smell of burning insulation or smoke comes out of the device, immediately turn off the device, disconnect the device from the power source and do not use the device until you have received the results of an inspection by the employees of the professional service centre.
- Have all repairs carried out by qualified personnel. Repairs are necessary if the device has been damaged in any way, for example if the power cord is damaged, liquid was poured on the device, foreign objects have entered the device, the device has been exposed to rain or moisture, if the device is not working as usual or if it has fallen.
- Before cleaning, carrying or other maintenance, disconnect the plug (adapter) from the power socket.
- Clean the device only with a dry cloth.
- For cleaning do not use petrol, thinners or any other solvents or use any abrasive cleaning agents, steel wool or any sponges with steel wool.

Remote control and batteries

- Do not expose the remote control or the batteries to direct sunlight or sources of heat, such as heaters, heat exchangers, stoves or other appliances (including amplifiers) producing heat. Do not use or leave the device in the vicinity of an open fire.
- Neither the remote control nor the batteries may be exposed to dripping or running water and objects filled with water must not be placed on them, e.g. vases. Protect against exposure to rain, spraying or pouring of any kind of liquid. Do not use outdoors. Not following these instructions creates a danger of damage to the remote control or the battery.
- Do not use this device near water.
- It is necessary pay attention to the environmental impact aspects of battery disposal.
- The incorrect use of batteries may cause the leakage of the electrolyte and corrosion. To ensure that the remote control works correctly, proceed according to the instructions below:
- Do not insert the batteries in the wrong direction.
- Do not recharge, heat, open or short circuit the batteries.
- Do not throw batteries into a fire.
- Do not leave discharged batteries in the remote control.
- Do not combine various types of batteries or new and old batteries.

Copyright © 2013, Fast ČR, a. s.

- If you will not be using the remote control for a long period of time, remove the batteries to prevent potential damage caused by a subsequent battery leakage.
- If the remote control is not working correctly or its operational range is reduced, change all batteries for new ones.
- If electrolyte leaks out from the batteries, have the remote control cleaned at an authorised service centre.

Attention:
To prevent a fire hazard or injury by electrical shock, do not expose this device to rain or humidity.

Attention:
Batteries must not be exposed to excessive heat, for example sunlight, fire, etc.

1. Contents of the transport cardboard box

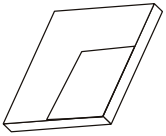

user's manual

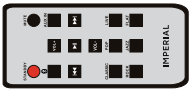

remote control

power adapter

Copyright © 2013, Fast ČR, a. s.

2. Description of the loudspeaker

Front panel

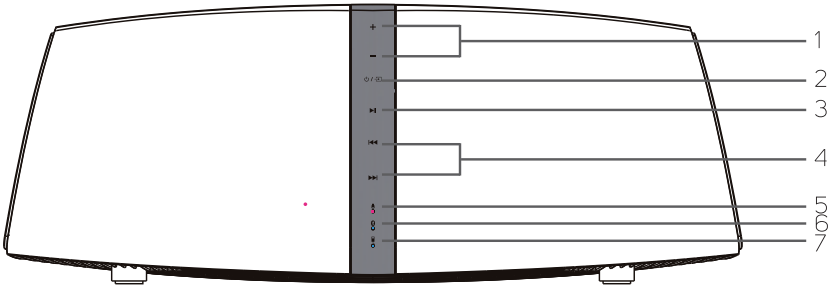

1. +/– buttons: increase / decrease volume
2. ⏻ / ⏎ button: turn on / select a mode
3. ⏯ button: play / pause
4. ⏮ / ⏭: skip to previous / next track

Note:
All buttons on the front panel are touch buttons.

5. Red stand-by mode indicator
6. Blue BLUETOOTH indicator
7. Yellow AUX IN indicator

Copyright © 2013, Fast ČR, a. s.

Rear panel

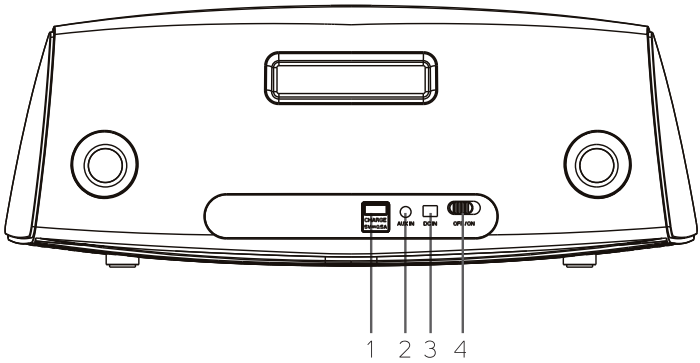

1. USB slot

Note:
When this USB slot is connected to the USB slot of another device via a USB cable, the rechargeable battery of the connected device will be charged.

2. Input AUX IN jack
3. DC IN jack (10V)
4. Main ON/OFF power switch

Copyright © 2013, Fast ČR, a. s.

3. Remote control

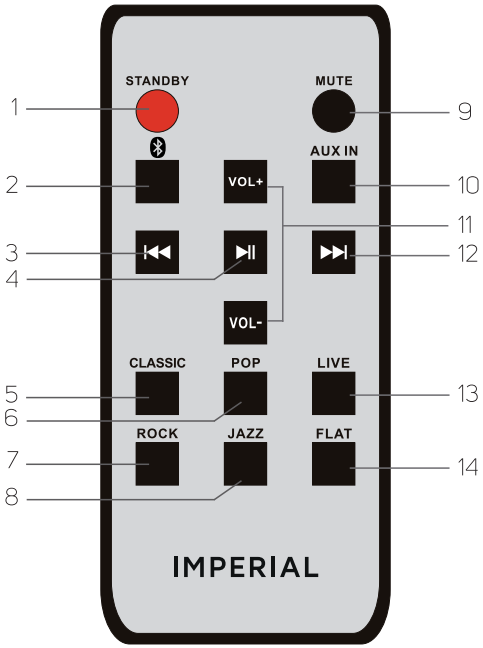

On the remote control the following buttons are available to the user:

1. STANDBY button
2. BLUETOOTH button
3. ⏮ button
4. ⏯ button
5. CLASSIC button
6. POP button
7. ROCK button
8. JAZZ button
9. MUTE button
10. AUX IN button
11. VOL +/– button
12. ⏭ button
13. LIVE button
14. FLAT button

Functions of the remote control buttons

STANDBY — Press the button to turn on the device, press it again to switch to the stand-by mode.

BLUETOOTH — Press this button to switch the device to the Bluetooth mode.

AUX IN — Button for switching the device to the AUX IN mode.

⏯ — Press to pause playback. Press the button again to continue playing the paused playback.

⏭ — Press the button to skip to the start of the next file / track.

⏮ — Press the button to skip to the start of the previously played file / track.

VOL+ — Button for increasing the volume.

VOL- — Button for decreasing the volume.

MUTE — Press the button to silence the system. Press the button again to renew the original volume level.

CLASSIC/POP/LIVE ROCK/JAZZ/FLAT — Buttons for selecting the equaliser settings.

Copyright © 2013, Fast ČR, a. s.

4. Connections

4.1 AUX IN

This input jack makes it possible to process a stereophonic analogue audio signal from CD players, VCRs, MP3 players, etc. with this device. For connection, use a stereophonic audio cable to connect the output connectors of the audio signal source with the input audio AUX IN jacks on this device.
To make the device process a signal from an external source connected to the AUX IN jacks, use the SOURCE button on the device or the AUX IN button on the remote control.

4.2 BLUETOOTH connection

To make the device process a signal from an external source connected via **Bluetooth**, use the switch on the device or the BLUETOOTH button on the remote control.
Use a mobile phone to scan for a Bluetooth signal source; after entering a password (factory set to **0000**) and after a successful connection is made, this device will be synchronised with the telephone and playback will commence.
In the Bluetooth mode the ⏯, ⏭, ⏮, VOL+, VOL- buttons and the MUTE button are functional.

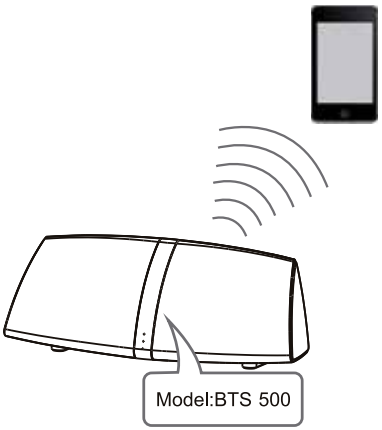

Copyright © 2013, Fast ČR, a. s.

5. Troubleshooting

In the event that you come across difficulties, proceed according to the solutions to the individual symptoms described below. The following symptoms may be caused rather by inappropriate settings than a real malfunction of the device. If problems persist, please contact a service centre.

Symptom	Possible cause	Remedy
Power supply missing	The power adapter is not connected to the device. The power adapter is not connected to the electrical power grid.	Check the connection of the power adapter.
Sound Sound is missing or distorted	Volume set to minimum. Sound is turned off.	Set the volume. Check the function of the MUTE button. Press the ⏯ button.
Buttons on the device do not work.	The device was subject to the effects of static electricity.	Turn off the device and disconnect the power adapter from the device. After connecting the power adapter to the device, turn the device back on.
The remote control does not work	Batteries have not been inserted into the remote control. The batteries in the remote control are flat. The remote control is not pointing at the remote control sensor on the front panel of the device. The device is located outside the effective range of the remote control. The device is turned off.	Insert batteries into the remote control. Replace both batteries in the remote control. Point the remote control at the remote control sensor on the front panel of the device during use. Use the remote control at a distance shorter than its effective range. Before using the remote control for operating the device, it is necessary to turn on the device using the ⏻ button located on the device.

Copyright © 2013, Fast ČR, a. s.

6. Technical specifications

Power source		10 V ⎓, 1.5 A
Consumption		15 W
Operating conditions	temperature	–10 to +35 °C
	relative air humidity	5 – 90 %
Max. power output of the loudspeakers		5 W + 5 W
Output voltage from the USB slot		5 V ⎓, 0.5 A

Changes to the design and technical information are reserved without prior announcement.

The CE symbol displayed on the unit, the user's manual and on the packaging shows that the unit meets the basic requirements of the R&TTE directive, 1995/5/EC, and the Low voltage directive 73/23/EEC. The declaration of conformity can be found at www.sencor.cz.

Copyright © 2013, Fast ČR, a. s.

INSTRUCTIONS AND INFORMATION REGARDING THE DISPOSAL OF USED PACKAGING MATERIALS

Dispose of packaging material at a public waste disposal site.

DISPOSAL OF USED ELECTRICAL AND ELECTRONIC APPLIANCES

The meaning of the symbol on the product, its accessory or packaging indicates that this product shall not be treated as household waste. Please, dispose of this product at your applicable collection point for the recycling of electrical & electronic equipment waste. Alternatively in some states of the European Union or other European states you may return your products to your local retailer when buying an equivalent new product. The correct disposal of this product will help save valuable natural resources and help in preventing the potential negative impact on the environment and human health, which could be caused as a result of improper liquidation of waste. Please ask your local authorities or the nearest waste collection centre for further details. The improper disposal of this type of waste may fall subject to national regulations for fines.

For business entities in the European Union

If you wish to dispose of an electrical or electronic device, request the necessary information from your seller or supplier.

Disposal in other countries outside the European Union

If you wish to dispose of this product, request the necessary information about the correct disposal method from local government departments or from your seller.

CE This product meets all the basic EU regulation requirements that relate to it.

Changes to the text, design and technical specifications may occur without prior notice and we reserve the right to make these changes.

Copyright © 2013, Fast ČR, a. s.

SENCOR®

EN Warranty conditions

Warranty card is not a part of the device packaging.

This product is warranted for the period of 24 months from the date of purchase to the end-user. Warranty is limited to the following conditions. Warranty is referred only to the customer goods using for common domestic use. The claim for service can be applied either at dealer's shop where the product was bought, or at below mentioned authorized service shops. The end-user is obligated to set up a claim immediately when the defects appeared but only till the end of warranty period. The end user is obligated to cooperate to certify the claiming defects. Only completed and clean (according to hygienic standards) product will be accepted. In case of eligible warranty claim the warranty period will be prolonged by the period from the date of claim application till the date of taking over the product by end-user, or the date the end-user is obligated to take it over. To obtain the service under this warranty, end-user is obligated to certify his claim with duly completed following documents: receipt, certificate of warranty, certificate of installation.

This warranty is void especially if apply as follows:

- Defects which were put on sale.
- Wear-out or damage caused by common use.
- The product was damaged by unprofessional or wrong installation, used in contrary to the applicable instruction manual, used in contrary to legal enactment and common process of use or used for another purpose which has been designed for.
- The product was damaged by uncared-for or insufficient maintenance.
- The product was damaged by dirt, accident of force majeure (natural disaster, fire, and flood).
- Defects on functionality caused by low duality of signal, electromagnetic field interference etc.
- The product was mechanically damaged (e.g. broken button, fall).
- Damage caused by use of unsuitable media, fillings, expendable supplies (batteries) or by unsuitable working conditions (e.g. high temperatures, high humidity, quakes).
- Repair, modification or other failure action to the product by unauthorized person.
- End-user did not prove enough his right to claim (time and place of purchase).
- Data on presented documents differs from data on products.
- Cases when the claiming product cannot be indentified according to the presented documents (e.g. the serial number or the warranty seal has been damaged).

Authorized service centers

Visit **www.sencor.eu** for detailed information about authorized service centers.

Copyright © 2013, Fast ČR, a. s.
Revision 04/2013

Copyright © 2013, Fast ČR, a. s.