SENCOR®

# SRD 230

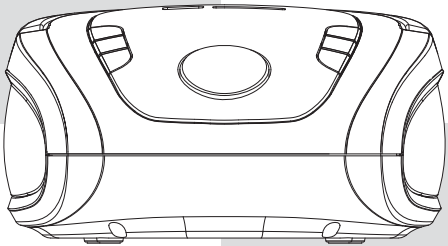

**USER'S MANUAL**
**NÁVOD K OBSLUZE**
**NÁVOD NA OBSLUHU**
**HASZNÁLATI ÚTMUTATÓ**
**INSTRUKCJA OBSŁUGI**

Portable radio with USB/SD/MP3 Player

Přenosné rádio s USB/SD/MP3 přehrávačem

Prenosné rádio s USB/SD/MP3 prehrávačom

Hordozható rádió USB/MP3 lejátszóval

Przenośne radio z odtwarzaczem USB/SD/MP3

EN | CZ | SK | HU | PL

# WARNING

TO PREVENT FIRE OR SHOCK HAZARD, DO NOT USE THIS PLUG WITH AN EXTENSION CORD, RECEPTACLE OR OTHER OUTLET UNLESS THE BLADES CAN BE FULLY INSERTED TO PREVENT BLADE EXPOSURE. TO PREVENT FIRE OR SHOCK HAZARD, DO NOT EXPOSE THIS APPLIANCE TO RAIN OR MOISTURE.

The lightning flash with arrowhead symbol, within an equilateral triangle is intended to alert the user to the presence of uninsulated dangerous voltage within the products enclosure that may be of sufficient magnitude to constitute a risk of electric shock to persons.

**CAUTION**

RISK OF ELECTRIC SHOCK
DO NOT OPEN

WARNING: TO REDUCE THE RISK OF ELECTRIC SHOCK, DO NOT REMOVE COVER (OR BACK), NO USER SERVICEABLE PARTS INSIDE, REFER SERVICING TO QUALIFIED SERVICE PERSONNEL.

The exclamation point within an equilateral triangle is intended to alert the user to the presence of important operating and maintenance (servicing) instructions in the literature accompanying the appliance.

The Caution Marking is located at the bottom enclosure of the apparatus.

# IMPORTANT SAFETY INSTRUCTIONS

1. Read these instructions.
2. Keep these instructions.
3. Heed all warnings.
4. Follow all instructions.
5. Do not use this apparatus near water.
6. Cleaning-Unplug this product from the wall outlet before cleaning. Do not use liquid cleaners or aerosol cleaners. Clean only with dry cloth.
7. Do not block any ventilation openings. Install in accordance with the manufacturer's instructions.
8. Do not place this product on an unstable cart, stand, tripod, bracket, or table. The product may fall, causing serious injury to a child or adult, and serious damage to the product. Use only with a cart, stand, tripod, bracket, or table recommended by the manufacturer, or sold with the product. Any mounting of the product should follow the manufacturer's instructions, and should use a mounting accessory recommended by the manufacturer. A product and cart combination should be moved with care-quick stops, excessive force and uneven surfaces may cause the product and cart combination to overturn.

9. Do not install near any heat sources such as radiators, heat registers, stoves, or other apparatus (including amplifiers) that product heat.
10. Do not defeat the safety purpose of the polarized or grounding-type plug. A polarized plug has two blades with one wider than the other. A grounding type plug has two blades and a third grounding prong. The wide blade or the third prong is provided for your safety. If the provided plug does not fit into your outlet, consult an electrician for replacement of the obsolete outlet.
11. Protect the power cord from being walked on or pinched particularly at plugs, convenience receptacles, and the point where they exit from the apparatus.
12. Only use attachments/accessories specified by the manufacturer.
13. Unplug this apparatus during lightening storms or when unused for a long periods of time.

14. Refer all servicing to qualified service personnel. Servicing is required when the apparatus has been damaged in any way, such as power-supply cord or plug is damaged, liquid has been spilled or objects have fallen into the apparatus, the apparatus has been exposed to rain or moisture, does not operate normally, or has been dropped.
15. This appliance shall not be exposed to dripping or splashing water and that no object filled with liquids such as vases shall be placed on the apparatus.
16. Do not overload wall outlet. Use only power source as indicated.
17. Use replacement part as specified by the manufacturer.
18. The product may be mounted to a wall only if recommended by the manufacturer.
19. Upon completion of any service or repairs to this product, ask the service technician to perform safety checks.
20. Power Sources - This product should be operated only from the type of power source indicated on the marking label. If you are not sure of the type of power supply to your home, consult your product dealer or local power company. For products intended to operate from battery power, or other sources, refer to the operating instruction.
21. Object and Liquid Entry - Never push objects of any kind into this product through openings as they may touch dangerous voltage points or short-out parts that could result in a fire or electric shock. Never spill liquid of any kind on the product.
22. Damage Requiring Service - Unplug this product from the wall outlet and refer servicing to qualified service personnel under the following conditions:
    a) When the power-supply cord or plug is damaged,
    b) If liquid has been spilled, or objects have fallen into the product,
    c) If the product has been exposed to rain or water,
    d) If the product does not operate normally by following the operating instructions. Adjust only those controls that are covered by the operating instructions as an improper adjustment of other controls may result in damage and will often require extensive work by a qualified technician to restore the product to its normal operation.
    e) If the product has been dropped or damaged in any way, and
    f) When the product exhibits a distinct change in performance - this indicates a need for service.
23. The mains plug/appliance coupler/direct plug-in adapter is used as disconnect device, the disconnect device shall remain readily operable.
24. Correct Disposal of this product. This marking indicates that this product should not be disposed with other household wastes throughout the EU. To prevent possible harm to the environment or human health from uncontrolled waste disposal, recycle it responsibly to promote the sustainable reuse of material resources. To return your used device, please use the return and collection systems or contact the retailer where the product was purchased. They can take this product for environmental safe recycling.

# LOCATION OF CONTROL

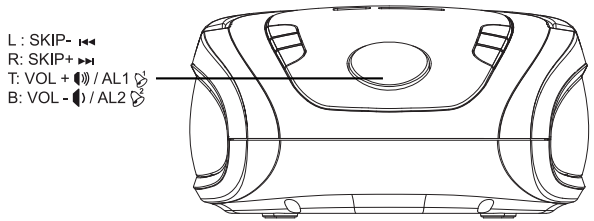


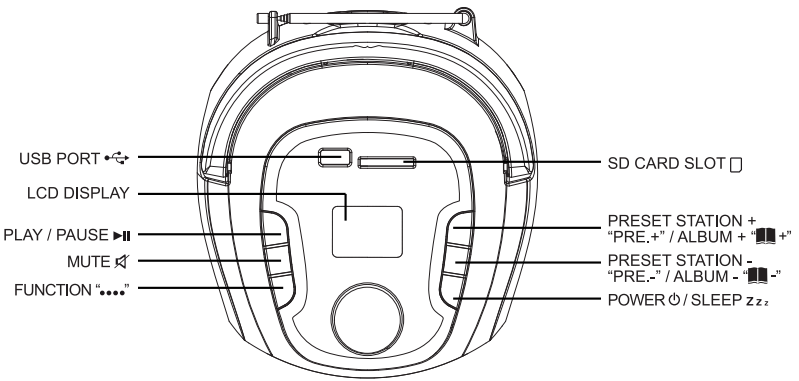


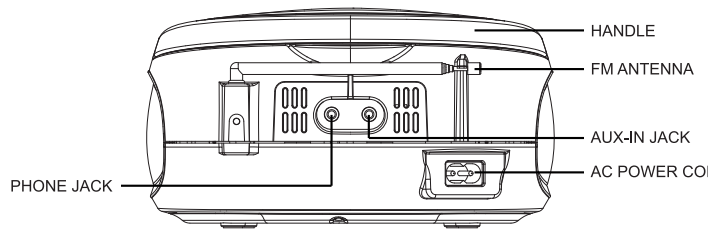

# IMPORTANT NOTES

Avoid installing the unit in locations described below:

- Places exposed to direct sunlight or close to heat radiating appliances such as electric heaters.
- Dusty places.
- Places subject to constant vibration.
- Humid or moist places.

# POWER SOURCES

This unit operates with AC 100-240V~50Hz or 4 x DC1.5V “C” (UM-2) batteries. Do not attempt to operate the unit on any other power source. You could cause damage to the unit and void your warranty.
Please be sure the power outlet you plug this unit into is working and receives constant (unswitched) power.

# AC OPERATION

1. When the AC power cord (included) is connected to the AC Power Socket on the back of the unit and the other end is plugged into a AC 100-240V~50Hz wall outlet, the unit will disconnect the batteries automatically, and operate on AC Power only.
2. Press the “⏻” button once to power on, press and hold the “⏻” again to power off!
3. Press the “MODE” button switch to “FM” or “USB” or “CARD” or “AUX” mode.

# BATTERY OPERATION

1. Remove the BATTERY DOOR.
2. Install 4 x DC1.5V “C” (UM-2) batteries (not included) according to the polarity diagram inside the battery compartment.
3. Close the BATTERY DOOR.

**IMPORTANT:** Be sure that the batteries are installed correctly.
Wrong polarity may damage the unit and void the warranty.
For best performance and longer operating time, we recommend the use of good quality alkaline-type batteries.

**CAUTION**

1. Do not mix old and new batteries.
2. Do not mix alkaline, standard (carbon-zinc) or rechargeable (nickel-cadmium) batteries.
3. If the unit is not to be used for an extended period of time, remove the battery. Old or leaking battery can cause damage to the unit and may void the warranty.
4. Do not dispose of batteries in fire, batteries may explode or leak.

**BATTERY REPLACEMENT**

When the output sound of this unit becomes distorted, the batteries are weak. You need to replace all the exhausted batteries at the same time as soon as possible to avoid battery leakage.

# FM OPERATION

1. Press the "⏻" button to switch on the unit.
2. Press the "MODE" button until the system entered the FM Radio mode.
3. Press once the "⏭" button for 2-3 s,and the high side of FM will seeking channel automatically and fix the channel.
4. Press once the "⏮" button for 2-3 s,and the low side of FM will seeking channel automatically and fix the channel.
5. During FM reception,always keep the FM TELESCOPIC ANTENNA fully extended for best performance. However, if FM receiption is weak, try repositioning the unit near an open window until you get the best reception.
6. Press the "🔊" or "🔉" to control the volume level.
7. Press and hold the "⏻" button to power off.

Preset Radio Station

- This product equipped auto station searching & saving function.
- In FM mode, Press and hold "⏯", unit will auto search and save all available radio station.
- Press "PRE.+" once to select the previous preset station or press "PRE.-" once to select the next preset station.

# USB OPERATION

1. Press the "⏻" button to switch on the unit
2. Press the "MODE" button unit the system entered the USB/SD mode
3. Connect the USB flash to the USB port. The unit will start playing automatically
4. Press the "⏮" button once for selecting the previous track, press and hold for backward searching
5. Press the "⏭" button once for selecting the next track, press and hold for forward searching
6. Press "📖+" for playing the next album. Press "📖-" for playing the previous album
7. Press "🔊" or "🔉" to control the volume level
8. Press and hold the "⏻" button to switch off the unit

**REPEAT**

Press and hold the "MODE" button during USB or Card mode each press switches the mode function as following.

1. - Repeat 1
2. - Repeat Album

**The unit cannot read my USB device.**

- Once you have plugged your device to the unit, you may need to switch on the USB device before it can operate.
- This unit does not support a direct USB connection with a computer. You need to use a USB device, or a MP3 player.
- If you are using a USB external hard disk: you need to connect your device simultaneously to an external power source and to the unit. If you are using a self-powered PMP, make sure that the battery is sufficiently loaded.
- Check that the files system of your USB device is formatted into the FAT or FAT 32 format. USB device formatted into NTFS are not compatible with this unit.

**Caution:** if you attempt to modify your file system, formatting your device will erase all data. Please refer to your USB device's instruction manual first.

# SD CARD OPERATION

1. Press the "STANDBY" button to switch on the unit
2. Press the "MODE" button unit the system entered the USB/SD mode
3. Connect the SD Card to the card slot. The unit will start playing automatically
4. Press the "⏮" button once for selecting the previous track, press and hold for backward searching
5. Press the "⏭" button once for selecting the next track, press and hold for forward searching
6. Press "Album +" for playing the next album. Press "Album-" for playing the previous album
7. Press "VOL+" or "VOL-" to control the volume level
8. Press and hold the "STANDBY" button to switch off the unit

**REPEAT**

Press and hold the "MODE" button during USB or Card mode each press switches the mode function as following.

1. - Repeat 1
2. - Repeat Album

**The unit cannot read my memory card.**

Check firstly that your memory card is compatible with the unit. Supported memory cards are SD, SDHC, MMC formats. We have tested this unit with most of the market's memory cards ; we cannot however guarantee a full compatibility with all the cards in the market because of the multiple technology standards in use. Should you have a compatibility problem: please use a memory card with a lower capacity (2GB or lower) or else connect the unit through a USB device.

# LOCK OPERATION

1. Clock setting only available in the STANDBY mode
2. Press and hold the "▶II" until the unit entered the clock setting mode. The display will flash and entered the 12/24 hour display setting
3. Press "⏮" or "⏭" to select desire setting
4. Press "▶II" to confirm and enter the next setting
5. Repeat step 3 and 4 for setting the Hour and Minutes

# ALARM OPERATION

1. Alarm setting only available in STANDBY mode
2. Press and hold the "1" or "2"button until the system entered the alarm setting mode.
3. Display will flash and entered the hour setting
4. Press "⏮" or "⏭" to select desire setting
5. Press "1" or "2" to confirm and enter the next setting
6. Repeat step 3 and 4 to setting the minutes, wake up sound sources (Buzzer/FM Radio/USB or SD)
7. After setting, the alarm will activities
8. Press "1" or "2" button once to active or disable the alarm

**SNOOZE**
When the alarm is triggered. Press the "🔇" button to delay the alarm for 9 mintues.

# AUX IN OPERATION

1. Connect 3.5 mm cable to this unit and your device with 3.5 mm output jack.
2. Press the "MODE" button until the system entered the AUX mode
3. Press "▶II" on your device and enjoy.

**Remark:** AUX mode will only appear when the unit connected with the 3.5mm jack cable (3.5 mm Aux-in cable not include)

# SLEEP OPERATION

1. Press the "Zzz" button to set the auto switch off timer (90>80>70>60...10>OFF>)
2. Unit can also switch off anytime by press and hold the "⏻" button

# SPECIFICATIONS

**General**

| | |
|---|---|
| Power Supply: | AC100V - 240V~ 50/60Hz |
| DC: | 4 x 1.5V 'C' (UM-2) Batteries (Not included) Power Consumption: 4W |
| Output Power (RMS): | 2 x 1W |
| Unit Dimensions: | 187 x 174 X 94 MM Unit Weight: 0.6 kg |

**Radio**

| | |
|---|---|
| Tuning Frequency: | FM: 87.5 -108MHz |
| Number of presettings: | 50 |
| Max. memory for USB and SD: | 16GB |

# CARE AND MAINTENANCE

1. Children should be supervised when using this appliance.
2. Never wrap the earphone lead around any animal or person. Special care should be taken with long wires.
3. Clean your unit with a damp (never wet) cloth. Solvent or detergent should never be used.
4. Avoid leaving your unit in direct sunlight or in hot, humid or dusty places.
5. Keep your unit away from heating appliances and sources of electrical noise such as fluorescent lamps or motors.

# TROUBLESHOOTING GUIDE

| Symptom | Possible Cause | Solution |
|---|---|---|
| Noise or sound distorted on FM broadcast | - Station not tuned properly for FM.<br>- FM telescopic antenna is not extended. | - Retune the FM broadcast station.<br>- FM: Extend FM telescopic antenna. |
| FM no sound | - Unit not in "FM" function mode.<br>- Volume set at minimum | - Press Function Switch to "FM" position.<br>- Increase Volume. |
| Sound appears distorted at high volume setting | - Volume control is set to maximum. | - Adjust Volume Control to a lower comfortable level. |

## INSTRUCTIONS AND INFORMATION REGARDING THE DISPOSAL OF USED PACKAGING MATERIALS

Dispose of packaging material at a public waste disposal site.

## DISPOSAL OF USED ELECTRICAL AND ELECTRONIC APPLIANCES

The meaning of the symbol on the product, its accessory or packaging indicates that this product shall not be treated as household waste. Please, dispose of this product at your applicable collection point for the recycling of electrical & electronic equipment waste. Alternatively in some states of the European Union or other European states you may return your products to your local retailer when buying an equivalent new product. The correct disposal of this product will help save valuable natural resources and help in preventing the potential negative impact on the environment and human health, which could be caused as a result of improper liquidation of waste. Please ask your local authorities or the nearest waste collection centre for further details. The improper disposal of this type of waste may fall subject to national regulations for fi nes.

**For business entities in the European Union**
If you wish to dispose of an electrical or electronic device, request the necessary information from your seller or supplier.

**Disposal in other countries outside the European Union**
If you wish to dispose of this product, request the necessary information about the correct disposal method from local government departments
or from your seller.

CE This product meets all the basic EU regulation requirements that relate to it.

Changes to the text, design and technical specifications may occur without prior notice and we reserve the right to make these changes.

© Copyright 2015, FAST ČR, a. s.

SENCOR®

# EN Warranty conditions

Warranty card is not a part of the device packaging.

This product is warranted for the period of 24 months from the date of purchase to the end-user. Warranty is limited to the following conditions. Warranty is referred only to the customer goods using for common domestic use. The claim for service can be applied either at dealer's shop where the product was bought, or at below mentioned authorized service shops. The end-user is obligated to set up a claim immediately when the defects appeared but only till the end of warranty period. The end user is obligated to cooperate to certify the claiming defects. Only completed and clean (according to hygienic standards) product will be accepted. In case of eligible warranty claim the warranty period will be prolonged by the period from the date of claim application till the date of taking over the product by end-user, or the date the end-user is obligated to take it over. To obtain the service under this warranty, end-user is obligated to certify his claim with duly completed following documents: receipt, certificate of warranty, certificate of installation.

**This warranty is void especially if apply as follows:**

- Defects which were put on sale.
- Wear-out or damage caused by common use.
- The product was damaged by unprofessional or wrong installation, used in contrary to the applicable instruction manual, used in contrary to legal enactment and common process of use or used for another purpose which has been designed for.
- The product was damaged by uncared-for or insufficient maintenance.
- The product was damaged by dirt, accident of force majeure (natural disaster, fire, and flood).
- Defects on functionality caused by low duality of signal, electromagnetic field interference etc.
- The product was mechanically damaged (e.g. broken button, fall).
- Damage caused by use of unsuitable media, fillings, expendable supplies (batteries) or by unsuitable working conditions (e.g. high temperatures, high humidity, quakes).
- Repair, modification or other failure action to the product by unauthorized person.
- End-user did not prove enough his right to claim (time and place of purchase).
- Data on presented documents differs from data on products.
- Cases when the claiming product cannot be indentified according to the presented documents (e.g. the serial number or the warranty seal has been damaged).

**Authorized service centers**

Visit www.sencor.eu for detailed information about authorized service centers.