FIELDMANN®
Home & Garden Performance

FZS 3020-B

English 3–24
Čeština 25–46
Slovenčina 47–68
Magyarul 69–90
Polski 91–112
Slovenščina 113–136

Petrol brush cutter
USER'S MANUAL

Thank you for purchasing this petrol brush cutter. Before you start using it, please carefully read this user's manual and save it for possible future use.

CONTENTS

1. GENERAL SAFETY INSTRUCTIONS 5
   Important safety information 5
   Packaging 5
   User's manual 5
2. EXPLANATION OF INSTRUCTION LABELS ON THE MACHINE 6
3. OPERATING INSTRUCTIONS 7
   Safety instructions 7
   Safety instructions – fuel 7
   Safety instructions – cutting tools 8
4. DESCRIPTION OF THE MACHINE 9
   Included contents: 9
5. ASSEMBLY 10
   Installing the string trimmer head 11
   Winding string trimmer line on to the trimmer head 11
   Installing the metal three tooth blade 12
6. MIXING THE FUEL MIX 12
   Storing fuel 13
7. PREPARING FOR OPERATION 13
   Points to check before starting work 13
8. STARTING THE BRUSH CUTTER 13
   Procedures for starting and stopping the engine 14
      Starting a cold engine 14
      Starting a warm engine 14
      Controlling the speed of the string trimmer head / metal three tooth blade 15
      Stopping the engine 15
9. CUTTING 15
   Cutting with the nylon string trimmer head 16
      Trimming grass 16
      Clearing and trimming edges 16
   Cutting using the blade 17
      Cutting weeds 17

10. MAINTENANCE AND STORAGE 18
Maintaining the machine 18
Servicing 18
Warranty does not cover: 18
Storage 18
11. WHAT TO DO "WHEN"... 19
12. DISPOSAL 21
13. DECLARATION OF CONFORMITY 22
14. TECHNICAL SPECIFICATIONS 23

1. GENERAL SAFETY INSTRUCTIONS

Important safety notice

- Carefully unpack the product and take care not to throw away any part of the packaging before you find all the parts of the product.
- Store the product in a dry place out of reach of children.
- Read all warnings and instructions. Not following warnings or instructions may lead to injury by electrical shock, a fire and/or serious injuries.

Packaging

The product is packed in a package that prevents damage during transport. This package is a resource and so can be handed over for recycling.

User's Manual

Before you start working with the machine, read the following safety and usage instructions. Acquaint yourself with the operating elements and the correct use of the machine. Keep the user's manual in a safe place where it can be easily retrieved for future use. Save the original packaging, including the internal packing material, warranty card and proof of purchase receipt at least for the duration of the warranty. If you need to ship this machine, pack it in the original cardboard box to ensure maximum protection during shipping or transport (e.g. when moving or when you need to send this product for repair).

Note: If you hand over the machine to somebody else, do so together with the user's manual.
Following the instructions in the included user's manual is a prerequisite for the proper use of the machine.
The user's manual also contains operating, maintenance and repair instructions.

The manufacturer takes no responsibility for accidents or damages resulting from not following the instructions in this manual.

2. EXPLANATION OF INSTRUCTION LABELS ON THE MACHINE

Carefully read the manual before use

While working use protective aids

General danger warnings!

Caution, recoil!

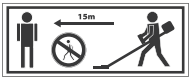

Keep other persons (particularly children) and animals out of range, at least 15 m from the working area.

3. OPERATING INSTRUCTIONS

Safety instructions

Read carefully!

- Always wear a safety helmet, safety gloves, protective clothing (cut-resistant trousers) and safety footwear.
- Keep the machine out of children's reach.
- Never run the engine if there is only petrol in the petrol tank.
- Never pour in fuel if the engine is running or if it is still hot. Only fill up the engine when it is cold.
- Store fuel in a closed container in a dry and cool place.
- Adhere to safety directives.
- Check the work area prior to every use. Remove items that could be deflected or that could jam in the machine.
- When working, all other persons must be outside the range of at least 15 meters.
- Never use the machine without the protective cover (of the cutting blade) installed.
- Never fill up the petrol tank so that it is completely full.
- The fuel tank cap must be firmly tightened to prevent fuel from leaking out.
- Do not permit the machine to run at full speed if the petrol tank is empty.
  Never turn off the machine suddenly if it is running at full speed.
- Do not use the machine if it is damaged in any way. Contact a qualified service centre.
- When carrying, hold the entire machine because holding it only by the fuel tank is dangerous and may result in damage to the petrol tank and a fire.
- Always hold the brush cutter with both hands.
- Never place a hot brush cutter on to dry grass.
- Smoking is forbidden when working with the machine.

Safety instructions

Fuel

- During transport, the fuel tank of the brush cutter must be empty.
- Only transport fuel in approved canisters.
- Regularly inspect the fuel tank cap. It must be tightened and fuel must not leak out
- Protect the environment: take care to avoid a fuel spill and soil contamination.
- Start the machine at least 3 metres away from where you filled it up with fuel.
- Never fill up fuel in closed rooms. There must be sufficient ventilation in the room, risk of an explosion.
- Do not inhale fuel vapours. Wear safety gloves when pouring in fuel.
- Regularly replace and clean your protective clothing.

Safety instructions

Cutting tools

- When installing the cutting tool, check the condition of the blade. If it is damaged (cracked, bent, broken off, etc.), replace it.
- After installing the blade, check again that the hole in the blade is level with the arm of the blade tang.
- Spin the blade, check again that the blade has no tendency to rotate irregularly.
- Check that the blade is installed with the sharp edge moving in the direction of rotation. Never install it the other way around.
- Check that the cutting tool is properly assembled by turning it without load (1 minute is enough).
- An appropriate blade must be selected for the material that is to be cut.
- Never push the blade against objects when in operation. Material must be cut at reasonable speed.
- If you hear an unusual noise or the machine vibrates abnormally, stop working and identify the cause.
- Do not stop the machine while the blade is cutting a material. There is a danger of damaging the machine. The cutting tool must be fitted with an appropriate guard.

⚠ **ATTENTION!** If instructions are not followed, there is a danger of a serious or even fatal Injury to persons!

- Acquaint all persons working with this machine with the operation of the machine and the safety instructions.

4. DESCRIPTION OF THE MACHINE

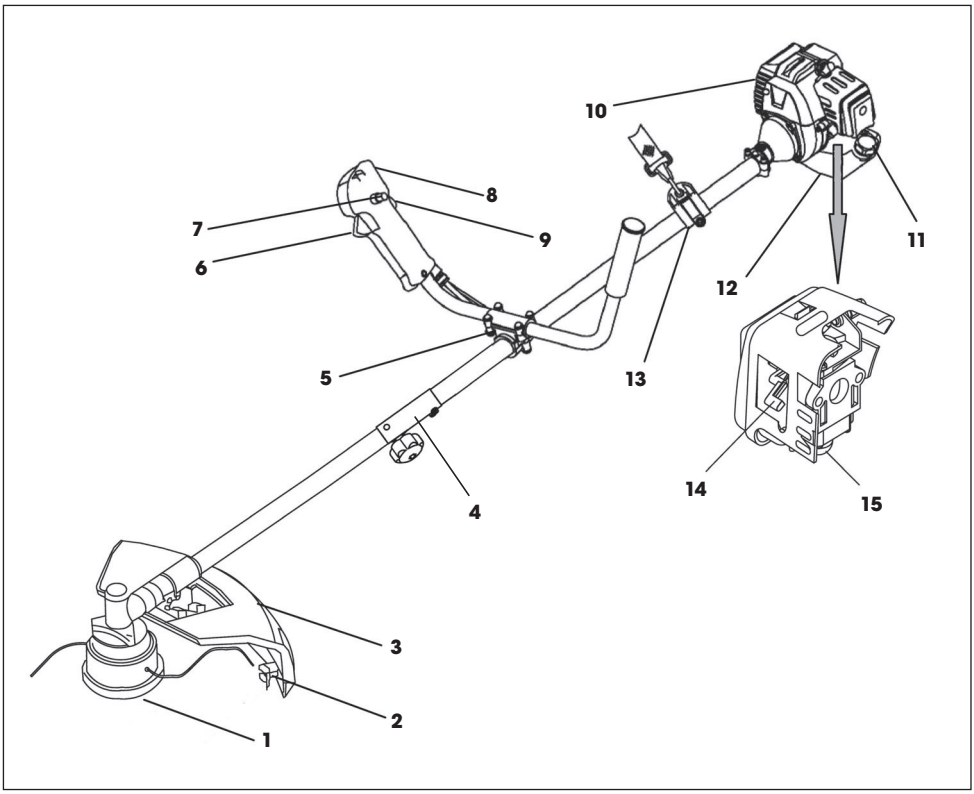

1. Metal three tooth blade / TWIST & GO string trimmer head
2. Trimmer line cutter
3. Protective safety guard
4. Split shaft coupler
5. Handle mount
6. Throttle trigger lock
7. Throttle trigger
8. Power switch
9. Throttle safety switch
10. Engine
11. Fuel tank cap
12. Fuel tank
13. Shoulder strap hitch
14. Choke control lever
15. Fuel primer bulb

Included contents:

Brush cutter, string trimmer head, metal three tooth blade, shoulder strap, calibrated fuel mixing container, tool set

5. ASSEMBLY

- Connect the shaft of the brush cutter (Fig. 2). Insert the bottom part of the shaft (Fig 2, point 1) into the coupling (Fig 2, point 2), which is a part of the top part of the shaft. The locking pin (Fig 2, point 3) must fit into the hole (Fig 2, point 4). Then secure both parts in place by tightening the screw (Fig 2, point 5). For easier transport of the brush cutter, the shaft can again be separated.

- Using the four included screws, attach the engine of the brush cutter to the shaft (see fig. 3).

- Install the protective guard on to the shaft using the supplied screws and nuts (see fig. 4)

- Install the handle into the mount (see fig. 5). The handle can be moved along the shaft. In this way, everybody can select the ideal comfortable working position. After selecting the ideal working position, tighten the screws. Fasten the control cable to the shaft using the supplied draw bands.

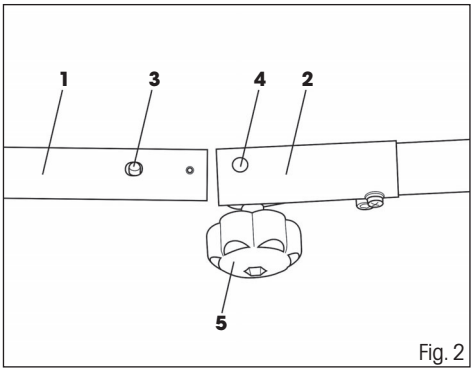

Fig. 2

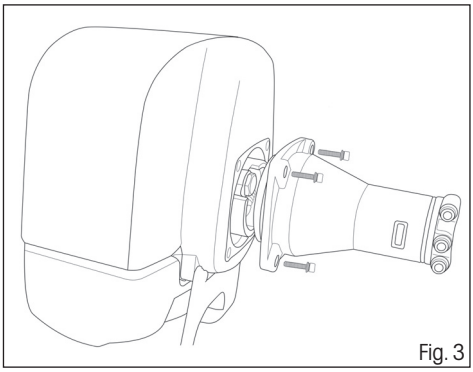
Fig. 3

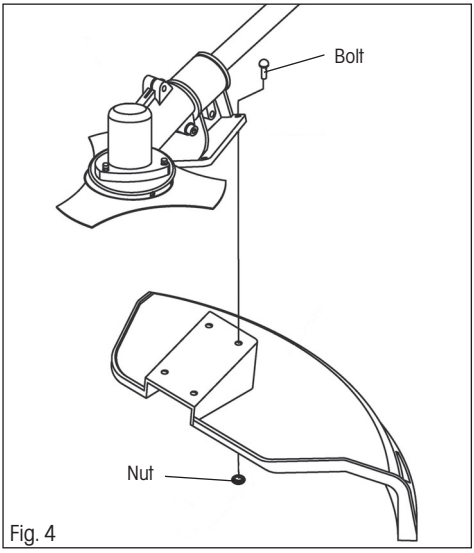

Fig. 4

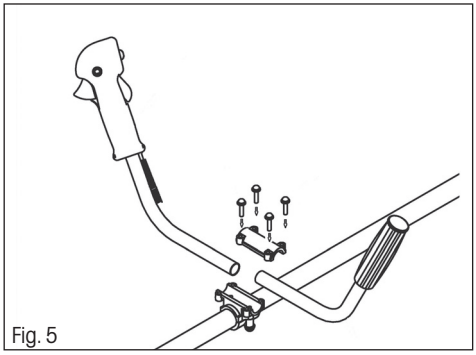
Fig. 5

Installing the string trimmer head

- Lock the shaft in place by inserting the hex key (see fig. 6). To achieve this, it is necessary to align the hole in the protective guard with the hole in the shaft and insert the hex key. Align the holes by turning the protective guard.
- Install the individual components in the following order:
  1. cogged retaining washer A (also equipped with a retaining hole)
  2. string trimmer head
- Please screw the string trimmer head on the shaft by turning anticlockwise (mind the reverse thread) and tighten properly.
- Take the hex key out of the retaining hole.

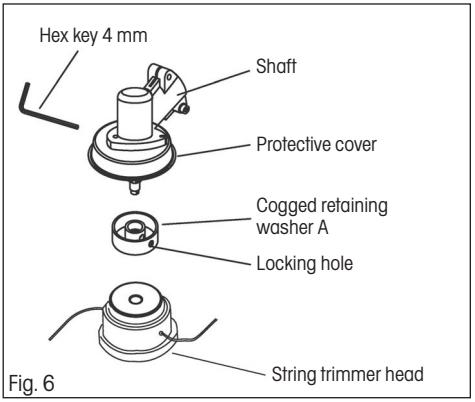

Fig. 6

Winding string trimmer line on to the trimmer head

1. Push in the retaining latches on the side of the head and take off the cover (see fig. A & B)
2. Take the spool out of the string trimmer head. Prepare about 2-3 m of string trimmer line with a diameter of 2.4 mm.
3. Bend the string trimmer line in the middle and secure the bend in the groove (see fig. C)
4. Wind both ends in parallel on to the spool in a clockwise direction. Secure the ends of the wound on string trimmer line into the prepared holes (see fig. D)
5. Return the spool back into the string trimmer head and secure in place with the cover (see fig. E and F)

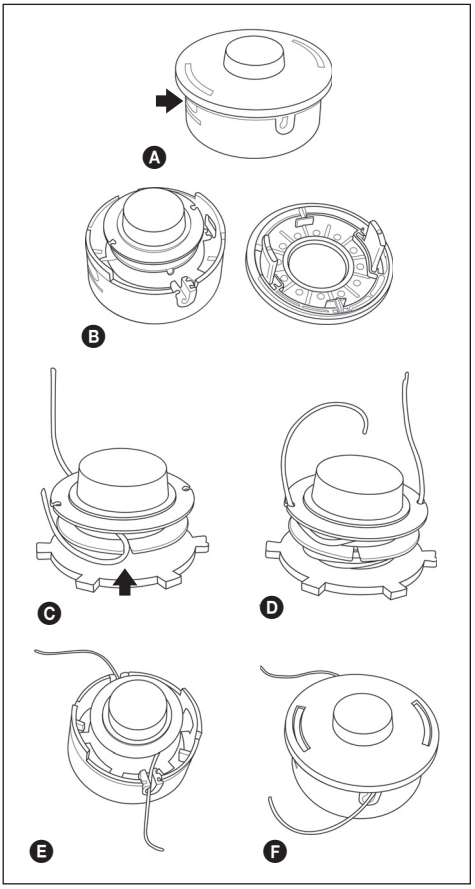

⚠ WARNING!

Use only good quality nylon string trimmer line with a diameter of 2.4 mm. Never use wire or wire-reinforced string trimmer line instead of the nylon string trimmer line. Only use the original string trimmer head.

Winding string trimmer line on the TWIST & GO trimmer head

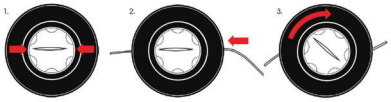

Installing the metal three tooth blade

- Lock the shaft in place by inserting the included 4mm hex key (see Fig. 7). To achieve this, it is necessary to align the hole in the protective guard with the hole in the shaft and insert the hex key. Align the holes by turning the protective guard.
- Install the individual components in the following order:
  1. Cogged retaining washer A (also equipped with a retaining hole)
  2. metal three tooth blade
  3. retaining washer B
  4. cup cover
  5. lock nut
- Make sure that the blade is correctly seated in the distancing part of the cogged retaining washer A
- Using the attached socket wrench, turn the knife's fixing nut anticlockwise (mind the reverse thread) until securely tightened.
- Take the hex key out of the retaining hole.

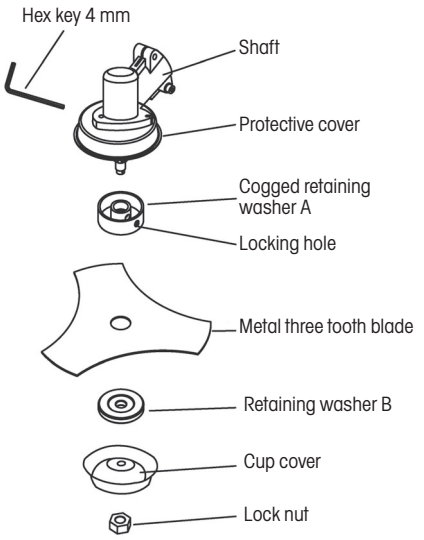

Fig. 7

⚠ **WARNING!**
IN THE EVENT OF EXCESSIVE VIBRATIONS – IMMEDIATELY STOP THE ENGINE

Excessive vibrations of the blade mean that this blade is not installed correctly. Immediately turn off the engine and check the blade.
An incorrectly installed blade may cause injuries.
Only use original accessories when performing maintenance or servicing this product.

6. MIXING THE FUEL MIX

⚠ **WARNING!**
- Never pour fuel into the fuel tank in a closed and unventilated location.
- Do not pour fuel in the vicinity of an open flame or a source of sparks.
- Do not overfill the petrol tank. Before starting the engine, make sure that all spilt fuel is wiped away.
- If the engine is hot, DO NOT POUR IN FUEL.

- **For this type of two-stroke engine a mixture of lead-free petrol and two-stroke engine oil is used at a ratio of 25 : 1.**

⚠ **ATTENTION!** A fuel mix that is mixed at a ratio other than 25 : 1 may damage the engine. Make sure that this fuel mix is mixed correctly.

- When mixing petrol with two-stroke engine oil, use only petrol containing NO ETHANOL or METHANOL (types of alcohols).
- Use quality petrol with an octane number of 95 or higher. This will help prevent possible damage to the fuel system and other parts of the engine.

Storing fuel

Only store fuel in a clean, safe and approved canister. Inform yourself about and adhere to local directives related to the type and storage of canisters filled with fuel.

⚠ IMPORTANT

Fuel for two-stroke engines may separate. Prior to every use, thoroughly shake the canister with fuel.
Stored fuel ages. Do not mix more fuel than you expect to consume within one month.

7. PREPARING FOR OPERATION

⚠ IMPORTANT:

Follow instructions for preparing the fuel mix! Not following these instruction may damage the engine! Do not use fuel that has been stored for longer than two months. A fuel mix stored for longer than two months will cause problems at start up and lower engine performance. If the fuel mix is stored for longer than two months, it should be removed and new fuel must be used.

Points to check before starting work

1. Check whether any screws, nuts and installation elements are loose. Tighten any loose screws.
2. Check whether the air filter is dirty. Prior to starting work, remove all dirt from the air filter.
3. Make sure that the plastic head guard and the blade is securely fastened in place.
4. Check the fuel tank for leaks.
5. Check the blade or the string trimmer head for damage.

8. STARTING THE BRUSH CUTTER

⚠ WARNING!

- Prior to starting the engine, make sure that the cutting blade/string trimmer head can move freely and is not touching any foreign objects.
- When the engine is idling, the cutting tool must not be turning. Otherwise, contact an authorised service centre to perform an inspection and remedy the problem.
- Prior to starting the engine, make sure that the throttle trigger moves freely.

⚠ **ATTENTION:** Hold the brush cutter firmly with both hands. Always stand so that your body is on the left of the shaft tube. Never hold the handle with crossed arms. These instructions also apply to left-handers.

⚠ **ATTENTION:** Exposure to vibrations may damage the health of persons that suffer from circulatory or nerve system problems. If any physical problems become evident, such as desensitisation, loss of sensitivity, loss of usual strength or changes in skin colour, please contact a doctor.
These systems usually manifest themselves on fingers, hands or wrists.

PROCEDURES FOR STARTING AND STOPPING THE ENGINE

Starting a cold engine

1. Set the power switch to the "START" position. (see fig. 8)
2. Repeatedly push down the fuel primer bulb (5 to 10 presses), until the fuel gets to the carburettor. (see fig. 9)
3. Move the choke lever upwards to the "OFF" position (=air supply turned off, i.e. choke turned on). (see fig. 9)
4. Lean the brush cutter against the ground so that it is stable and pull on the handle of the starting cord until the engine rotates (the engine will show signs of attempting to start).
5. At this point, push the choke lever downwards to the "ON" position (=air supply turned on, i.e. choke turned off) and start the engine by repeatedly pulling on the starting cord.

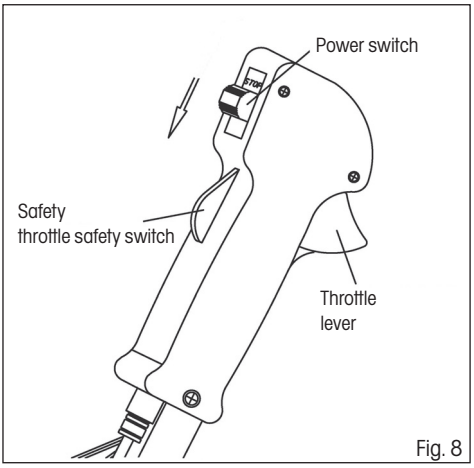

Fig. 8

⚠ **ATTENTION!** Spinning the engine for too long with the choke lever in the OFF position will result in flooding of the engine and problems with starting it up.

6. Prior to starting work, leave the engine to warm up for a few minutes to get up to operating temperature.

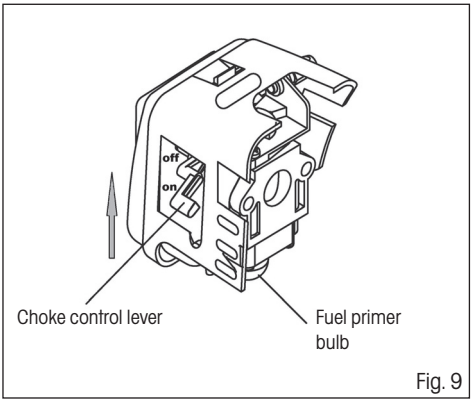

Fig. 9

Starting a warm engine

1. Set the power switch to the "START" position.
2. Pull on the handle of the starting cord until the engine starts up. DO NOT USE THE CHOKE!

⚠ **ATTENTION!** In the event that the fuel in the fuel tank was completely used up, after pouring in fuel, repeat the steps for STARTING A COLD ENGINE.

Controlling the speed of the string trimmer head / metal three tooth blade

- To increase speed, first use the palm of your hand to push down the throttle safety switch and then use your finger to pull on the throttle trigger (see fig. 8)
- The throttle trigger can be locked in place using the half-throttle lock (fig. 1, bod 6)
- To lower the speed, release the throttle trigger

Stopping the engine

- Move the power switch to the STOP position.

⚠ **WARNING!**
The engine exhaust fumes contain chemical substances that are damaging to health. Never inhale these fumes. Always start the brush cutter outdoors.

9. CUTTING

⚠ **WARNING!**
When working with any string trimmer or brush cutter model, there is a danger of deflecting stones, metal or small objects and the cut material. Carefully read all the safety directives.
Follow all the instructions provided in this user's manual.

⚠ **WARNING!**
Use head, eye, face and hearing protection. Use appropriate footwear that will protect your feet and which will ensure a firm stance on slippery surfaces. Do not wear ties, jewellery or loose clothing that could become caught in the moving parts of the tool. Do not wear footwear with an open tip. Do not work barefoot or with bare legs. In certain situations you must use full face and head protection.
Take care to avoid recoil and jamming of the blade.

⚠ **WARNING**
Always use the shoulder strap.
Set the shoulder strap and its hitch on the tool so that the brush cutter is suspended several centimetres above the terrain. The head of the brush cutter and the metal guard must be level in all directions. Hang the brush cutter on the right side of the body.

⚠ **DANGER ZONE**
NOBODY APART FROM THE OPERATOR MAY ENTER THE DANGER ZONE OF A 15 METRE RADIUS. THE OPERATOR MUST USE APPROPRIATE EYE, HEARING, FACE, FOOT, LEG AND BODY PROTECTION. PERSONS LOCATED IN THE DANGER ZONE OR IN THE RISK ZONE AFTER THE DANGER ZONE MUST USE EYE PROTECTION AGAINST DEFLECTED OBJECTS. THE RISK IS REDUCED WITH INCREASING DISTANCE FROM THE DANGER ZONE.

CUTTING WITH THE NYLON STRING TRIMMER HEAD

- The string trimmer head rotates CLOCKWISE.
- **The trimmer line is extended out semi-automatically. While trimming, simply gently tap the head on the ground, which will push down the button on the underside of the head and the string trimmer line will slide out. The string trimmer line is then shortened to the maximum permitted length on the blade integrated in the plastic guard.**

Trimming grass

- During this activity, carefully move the trimmer into the material that you wish to trim. Slowly tilt the head so that the trimmed material is ejected away from you. If you are trimming all the way up to obstacles such as fences, walls and trees, then approach at such an angle that all material is ejected away from you. Slowly move the head with the nylon string trimmer line from right to left until the grass is trimmed all the way to the obstacle but avoid the string trimmer line coming into contact with the obstacle.
- When trimming in the vicinity of a wire fence or enclosure, proceed carefully so as not to come into contact with the wires. If you exceed the minimum distance from the fence, the string trimmer line will be shortened after impact.
- When cutting weeds, it is possible to cut one stem at a time. Place the trimmer head with string trimmer line at the bottom part of the weed - never the top because the stem may start quivering and the string trimmer line may become caught in it. Rather than attempting to cut the weed directly, it is better to use only the end of the string trimmer line and to cut the stem slowly.

Clearing and trimming edges

- Both these tasks are performed using the head with the nylon line tilted at large angle. Clearing means removing the top vegetation after which only soil remains.
- Trimming edges means trimming the grass at the edge of lawns that extends on to footpaths and roads.
- While clearing and trimming edges, hold the tool at a steep angle and in a position where dirt, cut material and stones will not be ejected backwards towards you in the event that they ricochet from a hard surface. Despite the pictures showing how to perform clearing and trimming of edges, every user must find their own position that will suit their body dimensions and working conditions.

⚠ WARNING

If a head with a nylon line is used, the correct protective guard must be fitted. If the nylon line extends out too far, it may start fluttering. If you use a head with a nylon line, always use the protective plastic guard with the cutter blade.

⚠ WARNING

Be very careful when working above soil or gravel because the nylon line may deflect small stones at a very high speed.
The protective guard on this tool cannot stop objects that ricochet off hard surfaces.

⚠ WARNING

Do not trim in places where there are wires and wire mesh. Use protective aids. Do not trim in locations where you cannot see what the trimmer is trimming.

CUTTING USING THE BLADE

Cutting weeds

- This is cutting performed by a pendular movement of the blade in an arch shape. In this way you can quickly clear a large area of dense grass and weed. Brush cutting should be used for cutting large and tough weeds or woody vegetation.
- Brush cutting may be performed in both directions or only in one direction, which will mean that the cut material will be ejected away from you. With this type of cutting, the part of the blade moving away from you will do the work. Slightly tilt the blade down to the same side. If you will be brush cutting in both directions, you will be hit by some deflected material.

Note: Do not use the brush cutter blade for cutting trees with a diameter larger than 12 mm.

WARNING

DO NOT TOUCH THE FOLLOWING OBJECTS WITH THE BLADE:
METAL POLES, ELECTRICAL WIRE, RUBBER, MASONRY, STONES, FENCES

WARNING

Do not cut if the metal blade is blunt, cracked or damaged.
Before starting to cut, check that there are no obstacles in the work area such as rocks, metal poles or wound up wires. If you cannot remove these obstacles, mark them out so that they do not come in contact with the blade. Rocks or metal objects will blunt or damage the blade. Wires may wind on to the blade head or may be deflected and cause injuries.

10. MAINTENANCE AND STORAGE

Maintaining the machine

- Before every use:
  - Check that all nuts and bolts are tightened.
  - Check that no fuel is leaking from the fuel tank.
  - Lubricate the gearbox with grease.
- After every 20 hours of operation (For this purpose we recommend you contact an authorised service centre):
  - Clean the air filter.
  - Clean the fuel filter.
- After every 50 hours of operation (For this purpose we recommend you contact an authorised service centre):
  - Clean the spark plug and adjust the gap between the electrodes to a distance of 0.6–0.7 mm.
  - Clean out deposits from the exhaust and muffler.
  - Disconnect the shaft and lubricate with quality lubricant.
- Check the installation after performing maintenance and check that all nuts and bolts are pulled tight.

Service

- In the event that after purchasing the product you find any kind of defect, contact the service department. When using the product, follow the instructions contained in the included user's manual.
- A complaint will not be accepted if you modified the product or if you did not follow the instructions in the user's manual.

Warranty does not cover:

- Normal wear and tear of operating parts of the machine as a result of its use
- Servicing tasks related to standard maintenance of the machine (e.g. cleaning, lubrication, tuning, etc.)
- Defects caused by external effects (e.g. climatic conditions, dustiness, inappropriate use, etc.)
- Mechanical damage resulting from the machine being dropped, impact, etc.
- Damages resulting from unprofessional handling, overloading, use of incorrect parts, inappropriate tools, etc. On returned products that were not properly protected against mechanical damage during transport, the risk of potential damage is borne exclusively by the owner.

Storage

⚠ **ATTENTION!** If you will not be using the machine for an extended period of time, store it according to the following instructions. This will extend the lifetime of the machine.

- Fully drain fuel from the fuel tank and the carburettor. Close the choke and pull on the cord 3 to 5 times.
- Screw out the spark plug and pour a small amount of motor oil into the socket. Gently pull the pull cord 2 to 3 times.
- Use a clean cloth to clean the exterior surfaces. Store the machine in a clean dry location.

11. WHAT TO DO "WHEN"...

The engine will not start	Possible cause	Remedy
1. Check the fuel.	There is no fuel in the fuel tank or carburettor.	Add fuel.
	The fuel contains water.	
	Incorrect ratio of the fuel mix.	Drain the fuel tank and carburettor. Fill the fuel tank with new fuel.
2. Remove and check the spark plug.	Faulty or dirty spark plug.	Replace the spark plug
	Incorrect gap between the electrodes.	
	The spark plug is too damp, in contact with petrol (flooded engine).	Slide the spark plug out and reinstall.
3. Take the motor to a qualified service centre or to the vendor.	Clogged fuel filter, carburettor defect, starting defect, clogged valves, etc.	Replace or repair the faulty parts.

Engine performance is insufficient	Cause of the malfunction	Correction
1. Check the air filter.	Dirty air filter.	Clean or replace the air filter insert.
2. Check the fuel.	The fuel contains water.	Drain the fuel tank and carburettor. Fill the fuel tank with new fuel.
	Incorrect ratio of the fuel mix.	
3. Check the choke setting and the throttle controls.	The throttle is not fully open.	Adjust the setting.
	Poorly adjusted throttle cable.	
4. Take the motor to a qualified service centre or to the vendor.	Clogged fuel filter, carburettor defect, starting defect, clogged valves, etc.	Replace or repair the faulty parts.

The motor starts and dies immediately	**Possible cause**	**Remedy**
1. Check the fuel.	Fuel ran out.	Add fuel.
	The fuel contains water.	Drain the fuel tank and carburettor. Fill the fuel tank with new fuel.
	Incorrect ratio of the fuel mix.	
2. Remove and check the spark plug.	Faulty or dirty spark plug.	Replace the spark plug.
	Incorrect gap between the electrodes.	
3. Check the air filter.	Dirty the air filter. Clogged air filter.	Clean or replace the air filter insert.
4. Take the motor to a qualified service centre or to the vendor.	Clogged air bleed valve.	Replace or repair the faulty parts.
	Clogged fuel filter, carburettor defect, starting defect, clogged valves, etc.	

12. DISPOSAL

INSTRUCTIONS AND INFORMATION REGARDING THE DISPOSAL OF USED PACKAGING MATERIALS

Dispose of used packaging material at a site designated for waste in your municipality.

The machine and its accessories are manufactured from various materials, e.g. metal and plastic.
Take damaged parts to a recycling centre. Inquire at the relevant government department.

This product meets all the basic requirements of EU directives that apply to it.

Changes in the text, design and technical specifications may be made without prior notice and we reserve the right to make these changes.

User s manual in the original language.

13. DECLARATION OF CONFORMITY

ES Declaration of Conformity

Fast ČR, a.s., Černokostelecká 251 01 Říčany u Prahy, tel.:323204111, hereby declares,
that the Fieldmann FZS 3020-B Petrol Brush Cutter (year of manufacture is indicated on the rating label and is followed by the serial number of the machine, meets the directives COUNCIL DIRECTIVE:

2006/42/EC - 2004/108/EC - 2000/14/EC - 97/68/EC - 2002/88/EC

and was tested in compliance with the norms below:
EN ISO 11806-1:2011
EK-BE-56(v2):2012
EN ISO 14982:2009
EN ISO 3744:2010
ISO 10884:1995

FAST ČR, a.s. is authorised to act on behalf of the manufacturer.

CE label: 14

In Říčany, on 27. 8. 2014

FAST ČR, a.s.
Černokostelecká 1621
251 01 Říčany u Prahy
IČO: 26726548 tel.: +420/ 323 204 111
DIČ: CZ26726548 fax: +420/ 323 204 110

Petr Uher
Quality Manager

14. TECHNICAL SPECIFICATIONS

Model.	FZS 3020-B
Displacement	32.5 cm^3
Maximum engine power	1.15 kW
Length of shaft	1500 mm
Type of motor	2-stroke air cooled
Idling speed	3,000 rpm
Recommended maximum speed without load	7000 rpm
Trimmer line diameter	2.4 mm
Spark plug	L6 (LD)
Fuel tank volume	1200 ml
Fuel mix ratio (oil for 2-stroke engines/Lead-free 95)	1:25
Weight without fuel and cutting tools	6.6 kg
Acoustic power level, guaranteed LWA	108 dB(A)