FIELDMANN®
Home & Garden Performance

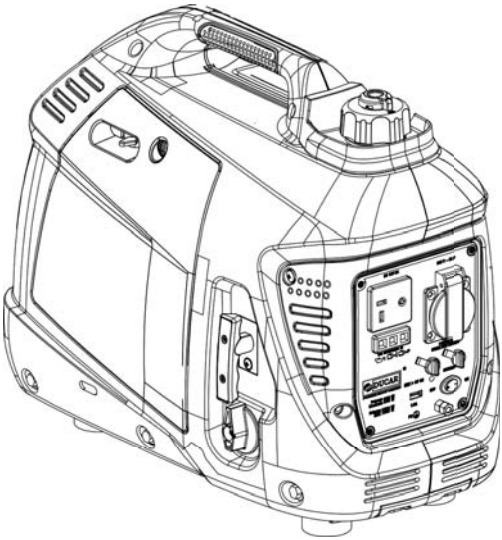

FZI 4010 BI

Invertor generator - four-stroke engine
USER'S MANUAL

Thank you for purchasing this four-stroke engine invertor generator. Before you start using it, please carefully read this user's manual and save it for possible future use.

TABLE OF CONTENTS

1. SAFETY INFORMATION

⚠ **Please read the following information carefully so that personal and property safety can be guaranteed.**

- Before using your generator, please read and understand the user's manual.
- Engine emissions contain poisonous carbon monoxide. Operate the generation in a ventilated location.
- During the generator operation and before it has cooled down, please don't touch the hot exhaust silencer.
- Under the specified conditions, the petrol is explosive and combustible. When replenishing the fuel, the generator should be turned off and no smoking and no flame sources are allowed in its neighbourhood.
- In order to prevent risk of electric shock or fire, don't connect the equipment to the building's grid or other generator.
- The running generator should be positioned at least one meter apart from frameworks and other electric appliances.
- Position the generator on flat surface to prevent overturning or fuel spilling.
- Keep your children and pets away from the work area.
- Don't handle with wet hands.
- Don't expose the generator to rain, moisture and snow.
- During operation, position the generator at least 1 m apart from buildings and other equipment.
- Bigger repairs may only be performed by a professionally trained person.
- Don't use the generator for underground applications.
- Don't use the generator in a potentially explosive environment.
- When operating or servicing your generator, use personal protective equipment: gloves, mask and ear plugs.

1.1 SAFETY LABEL

DANGER!

Using the generator indoors MAY CAUSE DEATH WITHIN A COUPLE OF MINUTES.
The generator's exhaust fumes contain carbon monoxide.
This is a poisonous substance neither to be seen nor smelled.

- NEVER operate the equipment in your house or garage, EVEN IF the doors and windows are open.

- Use only OUTDOORS and away from windows, doors and vents.

ATTENTION

- Failure to read and adhere to the instructions in the user's manuals may lead to death, personal injury or property damage.
- The running engines emit carbon monoxide, poisonous gas without smell and colour. Inhaling carbon monoxide may lead to nausea, fainting or death. DON'T START the equipment in enclosed spaces even if the windows and doors are open.
- The generator poses a risk of potential electric shock. Don't expose the equipment to moisture, rain or snow. Don't operate with wet hands of feet.
- Petrol and its vapours are combustible and explosive. Prior to replenishing the fuel, turn the engine off and let it cool down for at least 2 minutes.
- Failure to provide a proper grounding of the generator may lead to death as a consequence of electric shock especially in the generator is equipped with trundles.

⚠ **FOR MAINTENANCE SCHEDULE, PLEASE REFER TO THE USER'S MANUAL**
CHANGE OIL AFTER NO LONGER THAN 50 HOURS
Detach the panel on the invertor rear side to access the oil cap.
Failure to observe the specified service intervals leads to shortening the engine lifetime.
DON'T REMOVE THIS MARK

2. LOCATION OF SAFETY LABELS

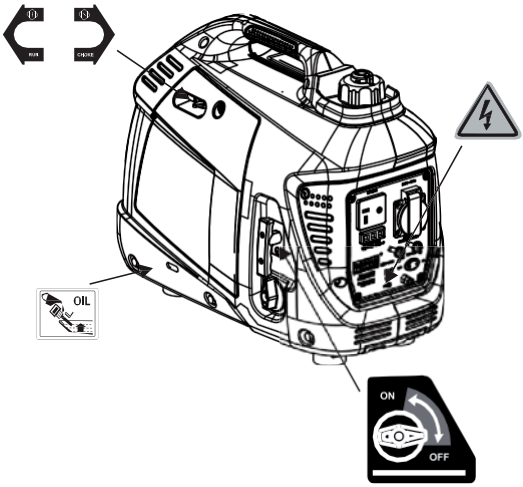

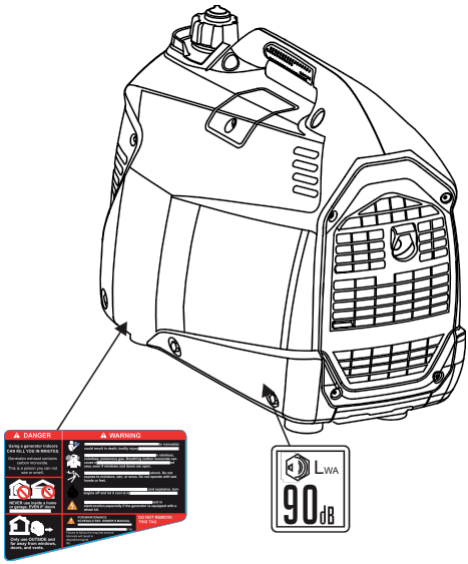

3. COMPONENT MARKING

1. Choke lever
2. Left service cover
3. Start-up handle
4. Engine switch
5. Control panel
6. Fuel tank cap
7. Fuel tank cap's bleeding lever
8. Spark plug's service cover
9. Exhaust silencer

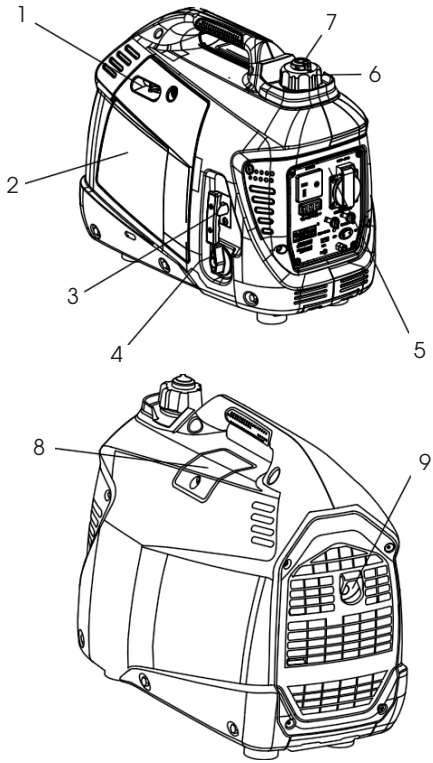

3.1 CONTROL PANEL

1. 12 V DC
2. AC socket
3. AC indicator (green)
4. Overload indicator (red)
5. Oil level warning indicator (red)
6. Parallel outputs ON
7. Economical mode switch
8. Ground terminal
9. USB slot

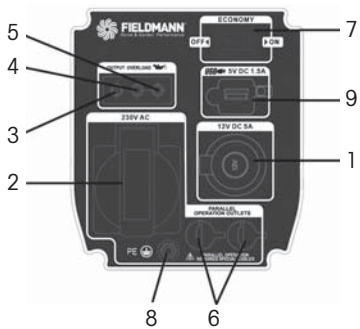

3.2 ECON. SW (ECONOMICAL MODE SWITCH)

- If the engine ECON switch is in the "ON" position, the economical mode control unit will automatically set the generator motor to an appropriate speed based on the connected electric load. This will result in higher fuel savings and lower noise level.
- If the engine ECON switch is in the "OFF" position, the engine will run at the rated speed of 4850 rpm.

Note: When working with electric equipment having a high inrush current, such as a compressor, the ECON switch must be set in the "OFF" position.

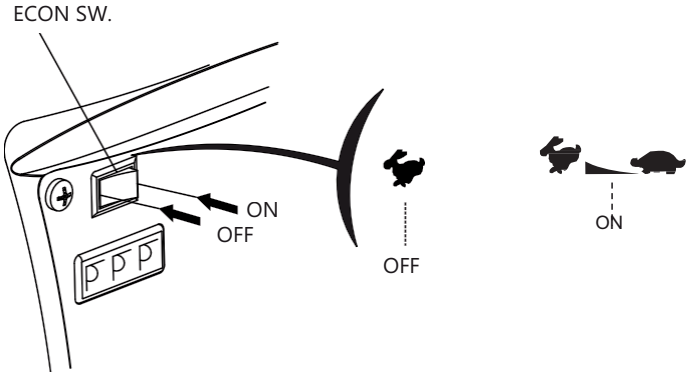

Note:

- When an appliance with a high current consumption is connected instantaneously, please set the economical mode switch to the "OFF"( ) position in order to soften the voltage change.
- When working with DC, set the economical mode switch to the "OFF" ( ) position.

Note:

- In the protection state, the power indicator (green) is off and the overload indicator (red) lights.
- At each engine start, the RESET button is available five times. Otherwise the engine needs to be restarted.

3.3 RESET

- In the protection state, the overload indicator (red) lights. To restore the generator power without necessity to fully restart the engine, press RESET.
- Hold down "RESET" button for one second until the overload indicator (red) goes out and the power indicator (red) lights.
- RESET has no effect in the no-load state.

4. PRE-OPERATIONAL CHECK

⚠ **Make sure that the generator is placed on a flat surface and is turned off.**

4.1 CHECKING THE OIL LEVEL

Remove the oil filler cap and clean it with a cloth. Mount it back on the crankcase and proceed to check the oil level:
If the oil level at the filler cap bottom drops, refill the motor oil.

1. Upper level
2. Dipstick
3. Oil filler cap

Oil tank capacity: 0.25 l
(Model FZI 4010 BI)

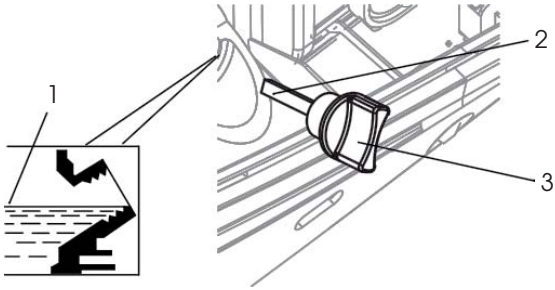

Note:

- Using non-detergent or two-stroke oil may lead to shortening the engine lifetime.
- Use quality motor oil with strong detergents.
- Use four-stroke motor oil meeting or exceeding the API standards: SG, SF, SAE viscosity value:

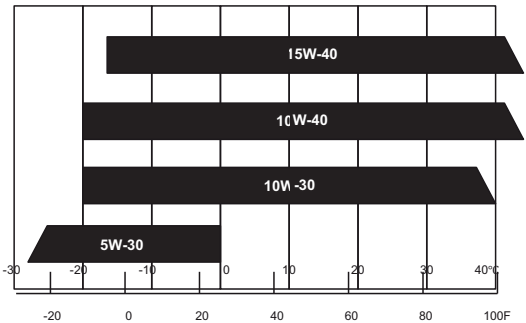

Take care when using and storing the motor oil and prevent debris or dust from entering the oil.
Mixing different oils is forbidden.

Note:

- Before the motor oil volume has dropped below the safety reserve level, the motor will be automatically stopped by the low oil level warning system and the oil warning indicator (red) will light.
- In order to avoid difficulties due to a sudden stop, it is recommended to regularly check the motor oil level.
- Before the motor oil volume has dropped below the safety reserve level, the motor will be automatically stopped by the low oil level warning system and the oil warning indicator (red) will light.
- In order to avoid difficulties due to a sudden stop, it is recommended to regularly check the motor oil level.

4.2 CHECKING THE FUEL LEVEL

Recommended fuel: please use unleaded petrol (octane number at least 95 by research method).
Never use disintegrating or contaminated petrol or a mixture of oil end petrol.
Prevent any dirt or water from entering the tank.
Don't use a petrol mixture with ethanol or methanol content as this may lead to a serious damage to the engine.

1. Fuel tank cap
2. Open
3. Upper limit mark

Fuel tank capacity: 3.0 l
(Model FZI 4010 BI)

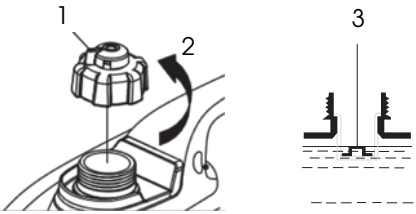

- Petrol is extremely explosive and flammable.
- It is forbidden to smoke and make fire at the location of fuel replenishment or storage area.
- Do not overfill the fuel tank (the fuel must not reach over the upper level red mark).
  Once replenished, make sure to properly and safely close the fuel tank.
- Prevent the fuel from spilling from the tank. (Before the engine start-up, there must be no excessive fuel around the tank filler).
- Avoid the fuel contact with skin and inhaling its vapours.

4.3 CHECKING THE AIR FILTER

Check if the air filter element is clean and in good condition.

- Loosen the air filter service cover screw and remove the cover.
- Press the latch on the air filter top.
- Take off the air filter cover.
- Check the filter element and clean or replace it as needed.

1. Cover screw
2. Air filter service cover

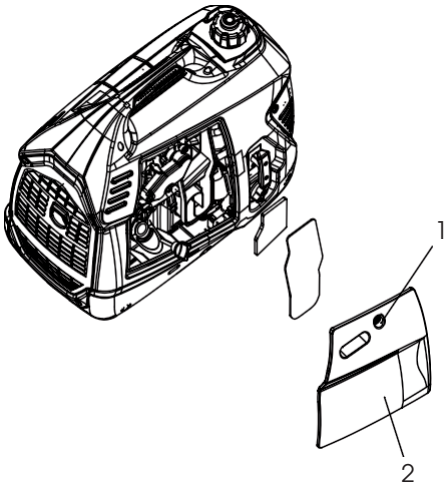

1. Latch
2. Latch
3. Air filter housing
4. Air filter element
5. Air filter cover
6. Lower latch

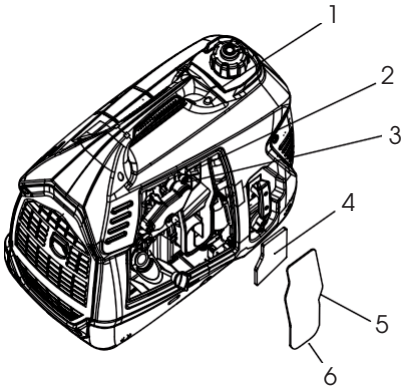

Note:

- Don't start the engine without the air filter element, otherwise a seizure might occur.

5. STARTING THE ENGINE

Note:

- Before starting the engine, remove the load from the AC socket.
- When filling the fuel for the first time, replenishing the fuel or storing the equipment for a longer period of time, it is necessary to open the motor switch for ten to twenty seconds first and then pull 10 to 20 times in order to feed the carburettor with enough fuel.

5.1 STARTING THE ENGINE - PROCEDURE

5.1.1 Turn the fuel tank cap's bleeding lever to the „ON" position.

1. Fuel tank cap's bleeding lever

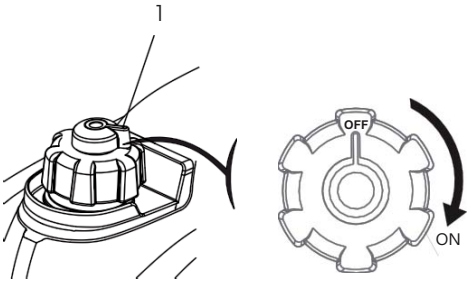

Note:

- During the generator transport, make sure that the fuel tank cap's bleeding lever is turned in the „OFF" position.

5.1.2 Turn the engine switch to the "ON" position.

Engine switch

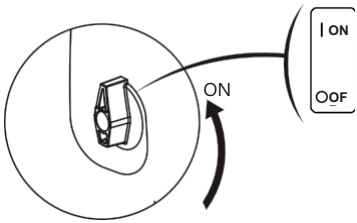

5.1.3 Turn the choke lever to the "CLOSED" position.

1. Choke lever
2. Closed

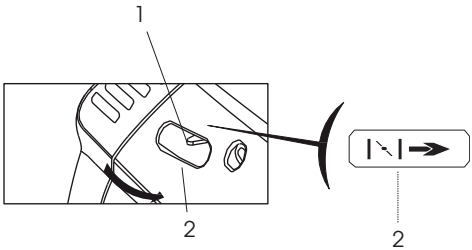

Note:

- Don't move the choke lever to the "CLOSED" position if the engine is hot or the surrounding temperature is high.

5.1.4 Pull the start-up handle softly until you feel resistance and then pull it quickly in the arrow direction as shown on the picture below.

1. Start-up handle

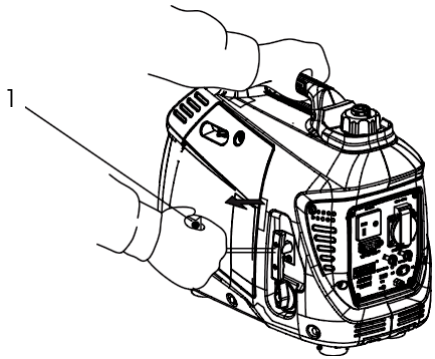

Note:

- Slowly return the start -up handle to its original position by hand. **Don't let it bump back.**

5.1.5 When the engine has started and warmed up, turn the choke lever to the "OPEN" position.

1. Choke lever
2. Opening

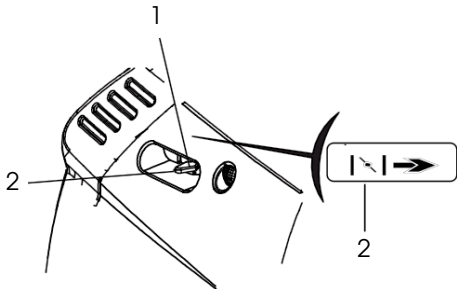

Note:

- If the generator stops and cannot he started again, check the oil level first.

Adjusting the carburettor for operation in high altitudes

In high altitudes, the standard air-fuel mixture is too rich for the carburettor. This will decrease the output and increase the fuel consumption. Also, very rich mixture leads to spark plug contamination and causes start-up problems. If the generator works in a high altitude, replace the main jet or adjust the carburettor idle screw.
If the generator is to be constantly operated at altitudes of more than 1,000m, please ask your authorized service to adjust the carburettor. The generator output power should be adjusted according to the altitude and ambient temperature. For correction factor, please refer to 13-2.

⚠ **If the carburettor has been adjusted for operation in high altitudes, the air-fuel mixture will be too lean to be used in low altitudes. Operation in low altitude may case overheating and lead to serious engine damage. The carburettor must be set back according to the original specifications.**

6. USING THE GENERATOR

⚠
- **Remember to ground the generator if the connected appliance is also grounded.**
- **In order to prevent risk of electric shock or fire, don't connect the equipment to the building's grid.**

1. Ground terminal
2. Earth mark

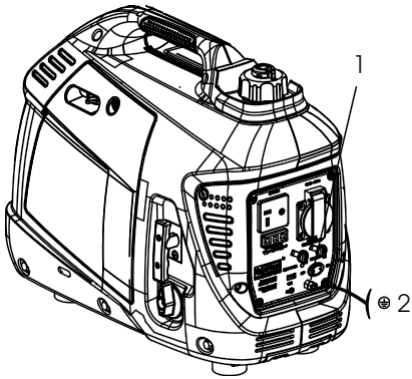

⚠
- **In order to ensure consistent operation, do not exceed the generator output power.**
- **Do not make parallel connections to other generators.**
- **Do not fix any attachments to the exhaust.**
- **If an extension lead is needed, use only flexible cable with solid rubber jacket (according to IEC245 or equivalent standards).**
  Length of extension lead: 60 m for a 1,5 mm2 cross-section cable;
  100 m for 2,5 mm² cross-section.
- **Keep away from other electric cables and wires.**

Note:
- The AC socket can be also used during DC power supply. When using simultaneously, make sure not to exceed the total AC and DC power. (AC: 0.9 kVA, DC: 5 A)
- Most motor appliances draw more than their rated power during start-up.

6.1 USING DIRECT CURRENT

- The DC socket can be also used during AC power supply.
- If the DC circuit protection trips as a result of DC circuit overload, remove the load first and reset the protection after severall minutes.

1. DC circuit protection

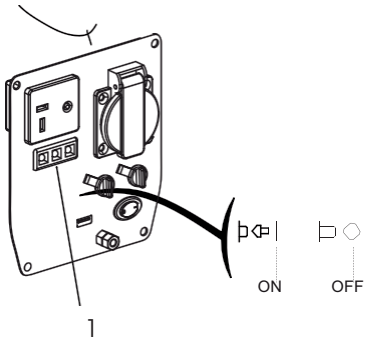

6.2 ALTERNATING CURRENT APPLIANCES

6.2.1 Start the engine and make sure that the green power indicator is on.
6.2.2 Make sure that all appliances are turned off and insert the appliance's plug in the generator socket.

Note:

- To achieve the best performance and the longest possible generator lifetime, the new generator should be running at 50% of its rated power for 20 hours.

1. Overload indicator (red)
2. AC current indicator (green)
3. Power socket

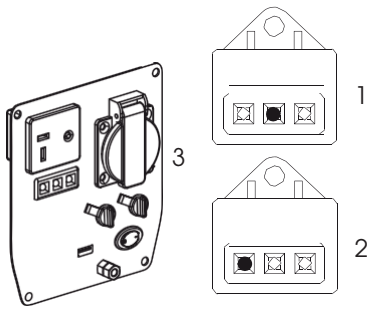

Note:

- Before connecting to the generator, make sure that all electric appliances are in good condition. If an electric appliance shows unusual behaviour, sluggish performance or stops suddenly, turn the generator motor off immediately and disconnect the appliance.

6.3 AC AND OVERLOAD INDICATOR

During normal operation, the AC indicator (green) remains lit.

If there is overload of the generator (over 0.9kVA) or short-circuit in the connected appliance, the green AC indicator goes out and the overload indicator (red) lights. The AC power supply turns off but the engine continues running.

If the overload indicator lights, disconnect the electric appliances first and then press the Reset button for 1 s. If the red overload indicator goes out and the green AC indicator is still lit, you can reconnect your electric appliances. Otherwise, stop the engine and check the generator.

6.4 OIL LEVEL WARNING SYSTEM

The oil level warning system protects the engine from damaging due to low oil in the crankcase. Before the crankcase oil level drops below the safety limit, the oil level warning system will automatically turn the engine off (the engine switch will remain in the "ON" position).

When the oil level warning system turns the engine off and the oil level warning indicator (red) lights, please checking the engine oil level.

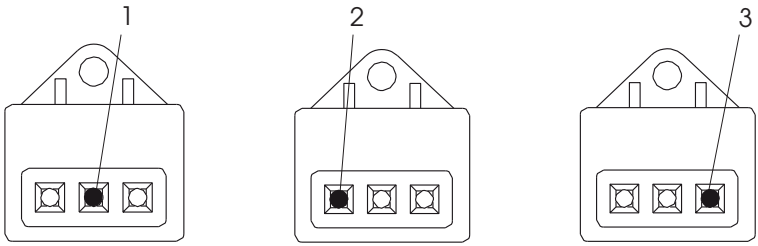

1. Overload indicator (red)
2. AC current indicator (green)
3. Oil level warning indicator (red)

7. STOPPING THE ENGINE

If it's necessary to stop the engine in an emergency, turn the motor switch in the "OFF" position.

7.1 STOPPING THE ENGINE - PROCEDURE

7.1.1 Turn off the connected electric appliances and unplug their cords from the mains.

1. Engine switch

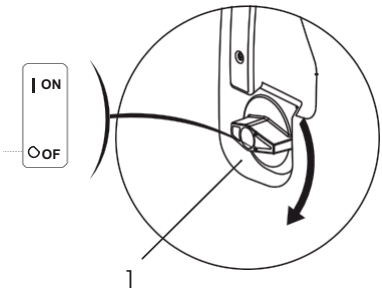

7.1.2 Turn the fuel tank cap's bleeding lever to the "OFF" position.

1. Fuel tank cap's bleeding lever

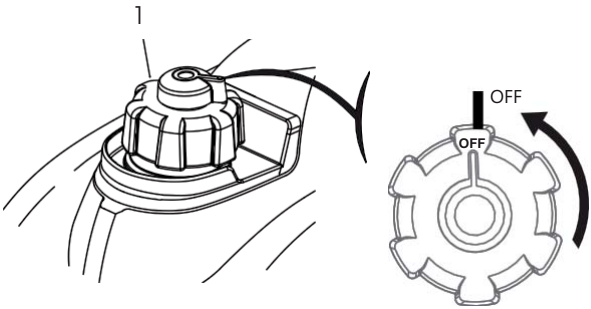

Note:

- Make sure that the fuel tank cap's bleeding lever and the motor switch are in the "OFF" position during stopping, transporting and storing the generator.

8. MAINTENANCE

The aim of the maintenance and adjustment schedule is to keep the generator in as good operating condition as possible.

⚠ ❁ **Turn the engine off before each time you perform the maintenance. If the engine must be running, make sure the area is well ventilated. Exhaust fumes contain poisonous carbon monoxide.**

❁ **When replacing the worn parts, always use original Fieldmann components or those of equal quality.**

Maintenance schedule

Regular service interval (3) / Item		At each use	First month or 10h	Once in 3 months or 50h	Once in 6 months or 100h	Once in 2 years or 300h
Engine oil	Level check	○				
	Replacement		○		○	
Air filter	Inspection	○				
	Cleaning			○ + (1)		
Spark plug	Check - adjustment				○	
Spark plug	Replacement					○
Spark gap					○	
Valve movement	Check - adjustment					○ + (2)
Combustion chamber	Cleaning	After every 300 h (2)				
Fuel tank and filter	Cleaning	Annually (2)				
Fuel lines		Once in 2 years (replacement if necessary) (2)				

Note:

❁ If the equipment is operated in dusty environment, service more frequently.

❁ If you lack necessary tools and mechanical skills, these items should be repaired by a service organization. For the service procedures, please refer to HEYA user's manual.

❁ In case of commercial use, determine correct maintenance intervals according to actual operating hours.

8.1 OIL EXCHANGE

Drain the oil quickly and fully while the engine is still hot. We recommend you to ask your Fieldmann service centre to perform the service jobs.

8.1.1 Loosen the air filter service cover screw and remove the cover.
8.1.2 Remove the oil filler cap.
8.1.3 Drain the contaminated oil thoroughly in appropriate container.
8.1.4 Refill with recommended oil and check the level.

8.1.5 Replace the oil filler cap.
8.1.6 Replace the service cover and tighten its screw.

1. Cover screw
2. Air filter service cover

Oil tank capacity: 0.25 l

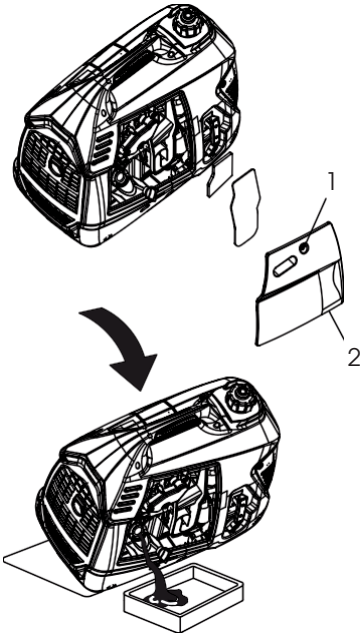

1. Dipstick
2. Oil filler cap

Oil tank capacity: 0.25 l

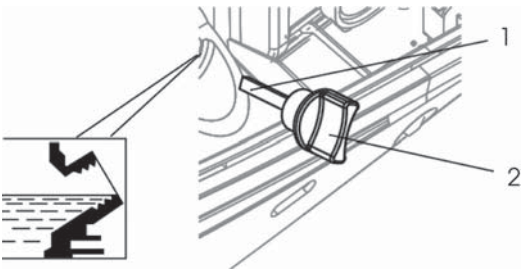

After the oil exchange, wash your hands with soap.

Note:

- In conformity with the environmental protection requirement, the used oil must be collected in a sealed container and handed over to a service centre for recycling. Do not discard in a dustbin or spill out on the ground.

8.2 SERVICING THE AIR FILTER

A contaminated air filter leads to restricting the air flow into the carburettor. Clean and maintain the air filter regularly especially in extremely dusty environment. We recommend you to ask your Fieldmann service centre to perform the service jobs.

⚠ **Never use petrol or solvents with low ignition temperature for cleaning. Under certain conditions, these are flammable and explosive substances.**

Note:

- Never start the generator without the air filter as this may lead to a quick motor seizure.

8.2.1 Loosen the air filter service cover screw and remove the cover.

1. Cover screw
2. Air filter service cover

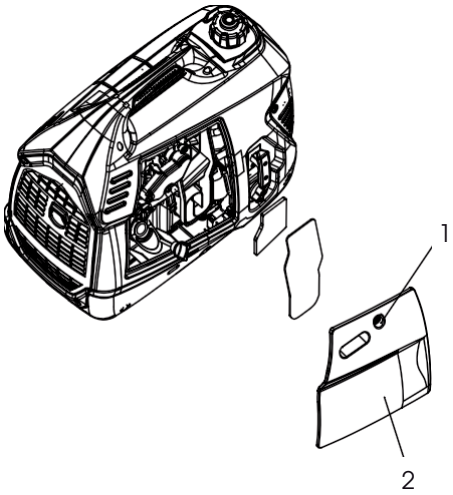

8.2.2 Press the latch on the air filter top and open the air filter cover.

1. Latch
2. Air filter housing
3. Air filter element
4. Air filter cover
5. Lower latch

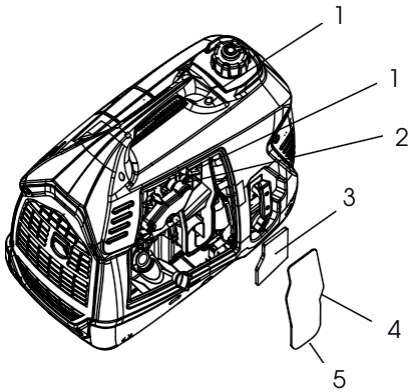

8.2.3 Remove the air filter element, clean it with non-flammable solvent or solvent with high ignition temperature and then dry out.
8.2.4 Soak the air filter element in clean motor oil and displace the excess oil.

1. Filter element

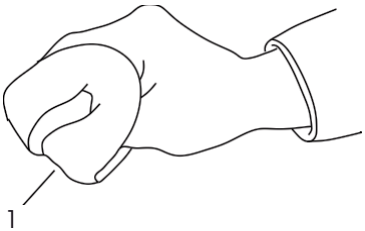

8.2.5 Replace the filter element and cover.
8.2.6 Replace the service cover and tighten the screws.

8.3 SERVICING THE SPARK PLUG

Recommended spark plug: CR7HSA
Check the spark plug electrode distance and clean the carbon deposits at the spark plug's bottom.
We recommend you to ask your Fieldmann service centre to perform the service jobs.

8.3.1 Remove the spark plug's service cover.

1. Spark plug's service cover

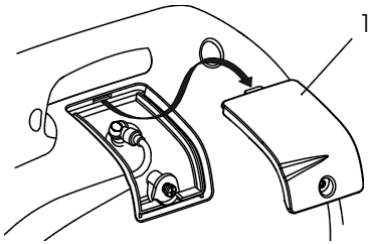

8.3.2 Remove the spark plug's cap.
8.3.3 Clean the carbon deposits at the spark plug's bottom.

1. Handle
2. Spark plug's cap

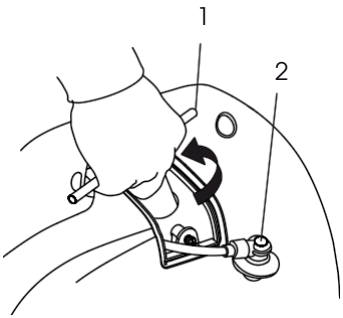

8.3.4 Remote the park plug using the spark plug wrench.
8.3.5 Inspect the spark plug and if the insulation is cracked or broken out, replace the spark plug.

If the spark plug is to be used again, clean it with a wire brush.

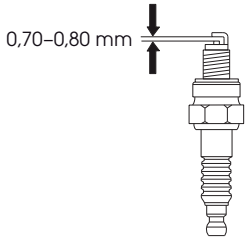

8.3.6 Measure the spark plug's electrode gap with a feeler gauge. Normal value: 0.70-0.80 mm. Adjust the gap by bending one of the electrodes carefully.
8.3.7 Replace the spark plug by hand and take care to avoid stripping the thread. Tighten the new spark plug with a wrench by 1/2 turn. Tighten the used spark plug with a wrench by 1/8 to 1/4 turn.
8.3.8 Replace the spark plug's cap.
8.3.9 Replace the spark plug's service cover.

Note:

- The spark plug must be tightened securely. Wrong tightening might lead to the spark plug's overheating or even engine damage.
- Never use a spark plug that has an incorrect temperature range.

8.4 SPARK GAP MAINTENANCE

The spark gap maintenance must be performed after each 100 operating hours. We recommend you to ask your Fieldmann service centre to perform the service jobs.

8.4.1 Remove all four screws and detach the exhaust silencer cover.

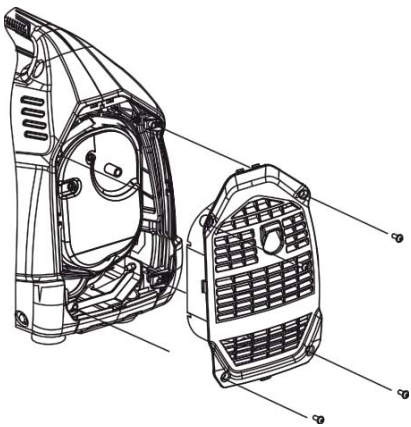

8.4.2 When the engine has cooled down, remove the spark gap from the silencer.

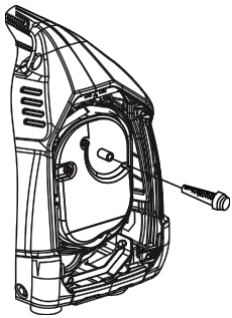

8.4.3 Clean the carbon deposits on the spark gap with a brush. If the spark gap is worn, replace it.

8.4.4 Replace the spark gap and the silencer cover.

Problem	Cause	Solution
The generator is running but there is no output power.	1. The direct voltage circuit breaker is in the "OFF" position. 2. The main alternating voltage green indicator is not lit. 3. Wrong connection 4. Faulty cable set 5. The connected equipment is faulty. 6. Generator fault	1. Switch the direct voltage circuit breaker in the "ON" position. 2. Turn the engine off and then start it up again. 3. Check and repair. 4. Check and repair. 5. Connect equipment which works well. 6. Contact the service department.
The engine is running well without a load but slows down when loaded.	1. Short circuit in the connected device 2. The generator is overloaded. 3. Clogged fuel filter 4. Engine speed is too low. 5. Short-circuit in generator	1. Disconnected device 2. See page 16 "Don't overload the generator" 3. Clean or replace the fuel filter. 4. Contact the service department. 5. Contact the service department.
The engine won't start, stalls during operation or starts but does not run smoothly.	1. The three-position switch is set to "OFF". 2. Blocked air filter 3. Clogged fuel filter 4. The fuel has run out or its quality is poor. 5. The spark plug's cable is disconnected from the spark plug. 6. Poor spark plug 7. Water in fuel 8. Excessive choke use 9. Low oil level 10. The engine is flooded with fuel. 11. Faulty ignition	1. Turn the switch in the "CHOKE" position and then pull the start-up rope. 2. Clean or replace the air filter. 3. Clean or replace the fuel filter. 4. Exchange the fuel. 5. Reconnect the spark plug cable. 6. Clean or replace the spark plug. 7. Drain the fuel tank and exchange the fuel. 8. Turn the choke off. 9. Raise the oil level. 10. Wait for 5 minutes and then turn the engine over. 11. Contact our seller.
The engine has no power.	1. The generator is overloaded. 2. Clogged fuel filter 3. Blocked air filter 4. The engine needs a service.	1. See page 16 "Don't overload the generator" 2. Clean or replace the fuel filter. 3. Replace the air filter. 4. Contact the service department.
The engine is choking or running unevenly.	1. The choke was turned off too early. 2. Clogged fuel filter 3. The carburettor is running on too rich or too lean mixture.	1. Adjust the choke to make the engine run smoothly. 2. Clean or replace the fuel filter. 3. Contact the service department.

9. TRANSPORT AND STORAGE

During the transport and temporary storage, prevent the fuel from spilling; the motor switch as well as the fuel tank cap's bleeding lever must be set in the "OFF" position and the generator must be in a normal working position.

9.1 GENERATOR TRANSPORT

⚠
- **Do not overfill the fuel tank. (There must be no excessive fuel on the tank filler).**
- **Do not use the generator in a transport vehicle. The generator should be used in a well ventilated environment.**
- **If the generator is placed in a closed transport vehicle for a longer period of time, protect it from direct exposure to sun beams. High temperature inside a vehicle might lead to fuel evaporation and possible subsequent explosion.**
- **When transporting the generator on uneven road, drain the fuel.**

Long-term storage:

9.1.1 Make sure that the storage room is not excessively damp or dusty.

9.1.2 Drain the fuel.

⚠ **Protect from smoke, fire and sparks; the petrol is explosive and flammable under given conditions.**

a. Drain the petrol form the fuel tank in a suitable container.

b. Set the motor switch to the "ON" position and loosen the carburettor drain screw to drain the fuel from the carburettor.

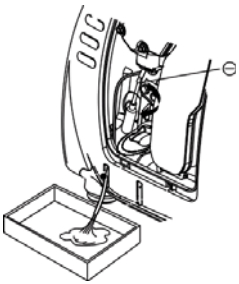

c. Remove the spark plug's cap, pull the start-up handle three to four times and drain the fuel from the fuel pump and lines.

d. Set the motor switch to the "OFF" position and tighten the carburettor drain screw.
e. Replace the spark plug's cap.

1. Start-up handle

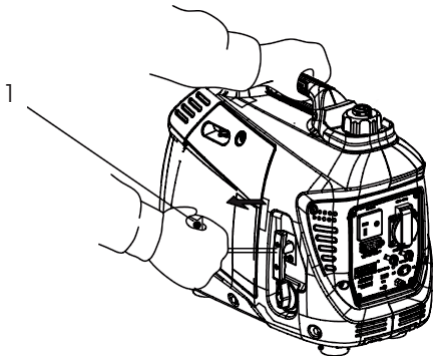

9 1.3 Change the motor oil.
9.1.4 Remove the spark plug and pour a spoonful of clean engine oil in the cylinder (10~20 ml).
Turn the engine over several times to make the oil spread and replace the spark plug.
9.1.5 Pull the start-up handle slowly until you feel resistance.
At such a moment, the piston comes into a compression stroke with the suction and exhaust valve closed.
This position helps to protect the engine from internal corrosion.

10. TECHNICAL SPECIFICATION

	Specifications	Parameters					
ENGINE	Model						
	Type of	4-stroke, DJ114F, single cylinder, forced air cooling					
	Engine displacement	54 cm^3					
	Bore/stroke	43.5 mm x 35.8 mm					
	Compression ratio	7,6:1					
	Rated speed	6000 rpm					
	Ignition system	Full transistor					
	Start-up system	Reverse starter					
	Fuel type	Unleaded fuel					
	Oil tank capacity	0.25 l					
	Oil type	SAE 10W30					
GENERATOR	Model	FZI 4010 BI					
	Rated frequency	50 Hz			60 Hz		
	Rated voltage	220 V	230 V	240 V	110 V	120 V	220 V
	Rated current	4.0 A	3.9 A	3.75 A	8.2 A	7.5 A	4.0 A
	Rated speed	5400 rpm					
	Rated power output	0.9 kVA					
	Max. output power	1.0 kVA					
	DC output	12 V/5 A					
	Fuel tank volume	3.0 l					
	Continuous running time	4.5 h (at rated power output)					
	Fuel consumption	600 g / kWh					
	Ambient temperature	-5~40 °C					
	Maximum altitude	1,000 m					
	Noise level (dB/7m)	61~67 dB					
	Dimensions (L x W x H)	505 x 310 x 430 mm					
	Net weight	15 kg					

11. WIRING DIAGRAM

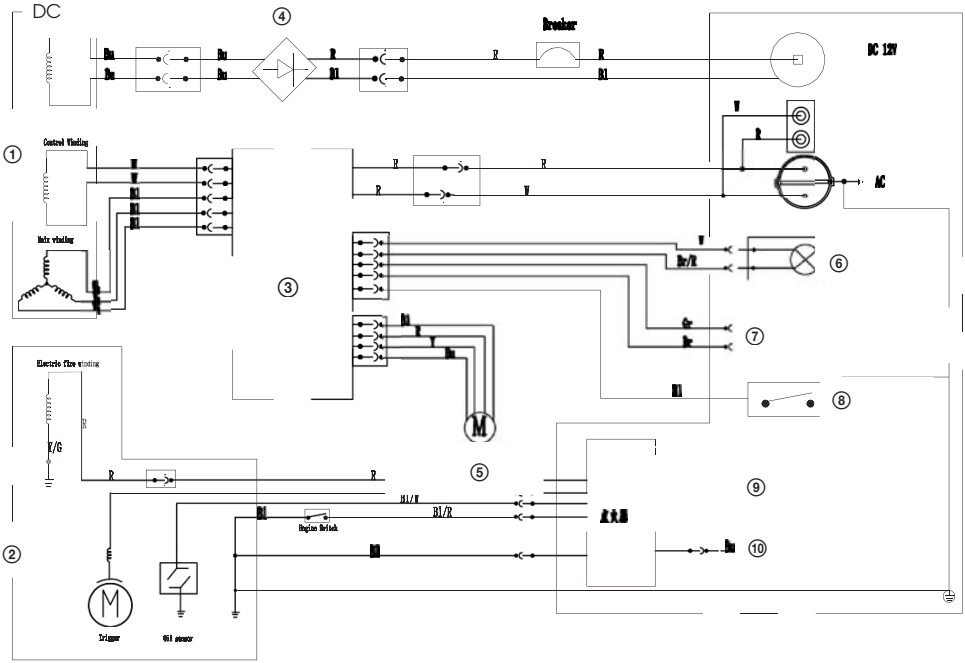

1. Generator
2. Engine
3. Inverter
4. Circuit breaker
5. Step motor
6. AC indicator
7. Overload indicator
8. Economical mode
9. Oil level warning indicator
10. High-pressure bladder

12. ATTACHMENT

12.1 ENVIRONMENT CONDITIONS

Standard conditions at rated power output:
Altitude: 0 m
Ambient temperature: 25 °C

Environment correction factor:

Altitude (m)	Ambient temperature (°C)				
	25	30	35	40	45
0	1	0.98	0.96	0.93	0.90
500	0.93	0.91	0.89	0.87	0.84
1000	0.87	0.85	0.82	0.80	0.78
2000	0.75	0.73	0.71	0.69	0.66
3000	0.64	0.62	0.60	0.58	0.56
4000	0.54	0.52	0.50	0.48	0.46

Note:
- Relative humidity 60 %, correction factor C -0,01
- Relative humidity 80 %, correction factor C -0,02
- Relative humidity 90 %, correction factor C -0,03
- Relative humidity 100 %, correction factor C -0,04

Example:
Rated power output (P_N) 0.9 kVA
Generator (1000 m altitude)
Ambient temperature: 35 °C
Relative humidity: 80 %

$P=P_N*(C-0.02)=0.9*(0.82-0.02)=0.72$ kVA

13. DISPOSAL

INSTRUCTIONS AND INFORMATION REGARDING THE DISPOSAL OF USED PACKAGING MATERIALS

Dispose of used packaging material at a site designated for waste in your municipality.

The appliance and its accessories are manufactured from various materials, e.g. metal and plastic.
Take damaged parts to a recycling centre. Inquire at the relevant government department.

Changes in the text, design and technical specifications may be made without prior notice and we reserve the right to make these changes.

User's manual in the original language.

14. DECLARATION OF CONFORMITY

FAST ČR, a. s.
Černokostelecká 1621, 251 01 Říčany, Czech Republic
tel.: +420 323 204 111, fax: +420,323,204,110

DECLARATION OF CONFORMITY

Manufacturer:
FAST ČR, a. s.
Černokostelecká 2111, 100 00 Prague 10, Czech Republic
Tax ID number: CZ26726548

Product/brand: INVERTER GENERATOR / FIELDMANN

Type/model: FZI 4010 Bi
AC OUTPUT: 230–240 V~, 50 Hz, DC OUTPUT: 12 V, 8 A

This product meets the requirement of the directives and regulations below:
EU Council Directive No. 2006/42/EU for machinery
ES Directive EMC No. 2014/30/EU for electromagnetic compatibility
ES Directive No. 2011/65/EU on the reduction of hazardous substances in electrical and electronic equipment

and norms:
EN 12601:2010
EN 55012:2007+A1
EN 61000-6-1:2007

CE mark: 16

Place of issue: Prague

Name: Ing. Zdeněk Pech
President of the executive board

Date of issue: 1. 4. 2017

Signature:

FAST ČR, a.s.
Černokostelecká 1621, 251 01 Říčany
IČO: 26726548 tel.: +420/ 323 204 111
DIČ: CZ26726548 fax: +420/ 323 204 110