FIELDMANN®
Home & Garden Performance

FDV 201501-E

1

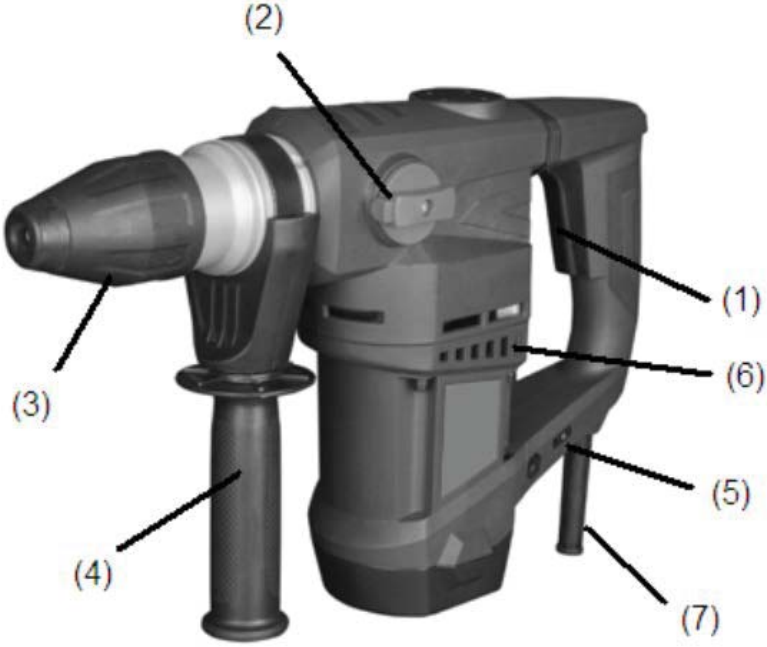

2

3

4

5

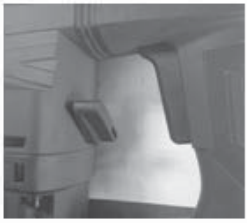

6

7

8

Hammer Drill
INSTRUCTION MANUAL

Thank you for your purchase of the hammer drill. For your personal safety, read and understand the Instruction Manual before using. Keep the Instruction Manual in a safe place for future reference.

CONTENTS

PICTORIAL APPENDIX 3
1. GENERAL SAFETY INSTRUCTIONS 6
Important Safety Instructions
Package
Instruction Manual
2. SYMBOLS 11
3. MACHINE DESCRIPTION AND ITEMS DELIVERED 12
4. ADJUSTMENT AND OPERATION 13
5. TECHNICAL SPECIFICATIONS 15
6. DECLARATION OF CONFORMITY 17
7. DISPOSAL 18

1. GENERAL SAFETY INSTRUCTIONS

⚠ **WARNING!** Carefully read the instruction manual before use.

Important safety warnings

- Unpack the product carefully and be sure not to throw away any part of the package before having found all components of the product.
- Keep the product in a dry place out of reach of children.
- Read all cautions and instructions. The failure to adhere to warning cautions and instructions may result in an accident, fire and/or a serious injury.

Packaging

The product is placed in a package preventing damage during transport. This package is a raw material therefore it can be handed-over for recycling.

Instructions for use

Before beginning to work with the machine, read the following safety rules and instructions for use. Familiarize with operating elements and the proper use of the device. Keep the manual in a safe place for future reference. We recommend keeping the original package including the inner packaging materials, cash voucher and guarantee card for a period of warranty at minimum. For a case of transportation, pack the machine into the original box from the manufacturer, thus ensuring a maximum protection of the product during a possible transport (e.g. moving or sending into a service station).

Note: If you hand the machine over to next persons, hand it over together with the manual. Adherence to the attached instructions for use is a precondition for the proper use of the machine. The operation manual includes also instructions for operation, maintenance and repairs.

The manufacturer does not take any responsibility for accidents or damages resulting from the failure to adhere to this manual.

GENERAL SAFETY INSTRUCTIONS

Carefully read, remember and keep these safety instructions

⚠ **WARNING!** In the use of electric machines and power tools, it is necessary to respect and follow the following safety instructions for the reasons of protection against electric shock, personal injury and danger of fire. The term "power tool" in the instructions below refers both to mains-operated (corded) power tool or battery-operated (cordless) power tool. Save all warnings and instructions for future reference.

Workplace

- Keep the work area clean and well lit. Cluttered or dark areas in the workplace invite accidents. Store power tools that you don't currently use.
- Do not operate power tools in environments with danger of occurrence of a fire or explosion, such as in the presence of flammable liquids, gases, or dust. Power tools create sparks which may ignite the dust or fumes.
- Keep unauthorised persons, especially children, away from the work area while operating a power tool! Distractions can cause you to lose control over the performed activity. In no event leave your power tool unattended. Keep the equipment away from animals.

Electrical Safety

- Power tool plugs must match the mains socket outlet. Never modify the plug in any way. Do not use any adapter plugs with earthed (grounded) power tools. Undamaged plugs and matching outlets will reduce risk of electric shock. Damaged or fouled supply cables increase the risk of electric shock. If the power cord is damaged, it must be replaced by a new power cord which is available at the authorised service centre or the importer.
- Avoid body contact with earthed or grounded surfaces such as pipes, radiators, cooking ranges and refrigerators. There is an increased risk of electric shock if your body is earthed or grounded.
- Do not expose power tools to rain or wet conditions. Never touch the power tool with wet hands. Never wash the power tool under running water or immerse it in water.
- Never use the supply cable for other than intended purposes. Never use the cord for carrying or pulling the power tool. Never unplug the plug from the outlet by pulling the cable. Keep electric cables away from sharp or hot objects to prevent mechanical damage.
- The power tool was designed to be powered solely by alternating electric current. Always check if the electric voltage matches the information specified in the type label of the power tool.
- Never use power tool with damaged electric cable or plug or which has been dropped or is in any way damaged.

- If an extension cord is used, always check whether its technical parameters match the information specified in the type label of the power tool. When operating a power tool outdoors, use an extension cord suitable for outdoor use. If extension drums are used, these must be rolled out to prevent overheating of the cord.
- If a power tool is operated in a damp location or outdoors, its operation is only permitted if connected to an electric circuit protected by a residual current device <30 mA. Use of residual current device (RCD) reduces the risk of electric shock.
- Hold the power tool by insulated gripping surfaces only as the cutting or drilling tool may contact hidden wiring or its own power cord during operation.

Personal Safety

- Be careful, stay alert and watch what you are doing when operating a power tool. Concentrate on your work. Do not use a power tool while you are tired or under the influence of drugs, alcohol or medication. A moment of inattention while operating power tools may result in serious personal injury. Do not eat, drink and smoke while operating a power tool.
- Use personal protective equipment. Always wear eye protection. Use protective equipment corresponding to the type of work you are doing. Protective equipment such as dust mask, non-skid safety shoes, hard hat, or hearing protection used in accordance with the working conditions will reduce the risk of personal injury.
- Prevent unintentional starting. Do not carry the power tool while it is energised or with your finger on the switch or trigger. Ensure the switch or trigger is in the "off" position before connecting to power source. Carrying power tools with your finger on the switch or energising power tools that have the switch on may result in serious injuries.
- Remove any adjusting key or wrench before turning the power tool on. An adjusting wrench or a key left attached to a rotating part of the power tool may result in personal injury.
- Keep proper footing and balance at all times. Do not overreach. Never overestimate your own capabilities. Never use power tools while you are tired.
- Dress properly. Wear work clothes. Do not wear loose clothing or jewellery. Keep your hair, clothing, gloves and other part of your body away from moving or hot parts of the power tool.
- Connect the equipment to dust exhaustion. If the tools are provided for the connection of dust collection or exhaustion devices, ensure these are properly connected and used. Use of such devices can reduce dust-related hazards.
- Fix the work-piece tightly. Use a cabinet clamp or a cramp to fix the work-piece you are about to machine.
- Never use power tools if you are under the influence of alcohol, drugs, medication or other narcotic or addictive substances.
- This equipment is not intended for use by persons (including children) with limited physical, sensual or mental capacities or lack of experience or knowledge unless they are supervised or instructed about the use of the equipment by a person responsible for their safety. Children must be supervised to make sure they are not playing with the equipment.

Power Tool Use and Maintenance

- Always disconnect the power tool from the mains in case of any problem during the work, before cleaning the power tool or its maintenance, during each transportation and after the completion of the work! Never operate a power tool if it is damaged in any way.
- Immediately stop working if the power tool generates abnormal noise or smell.
- Do not overload the power tool. The power tool will operate better and safer if it is used at the rate for which it was designed. Use correct power tool which is intended for the given activity. The correct power tool will do the job it was designed for better and safer.
- Do not use the power tool if it cannot be safely turned on and off using the control switch. Use of such power tool is dangerous. Defective switches must be repaired by a certified service provider.
- Disconnect the tool from the power source before making any adjustments, changing accessories or maintenance. Such preventive safety measure prevents the risk of starting the power tool accidentally.
- Store idle power tools out of the reach of children and unauthorised persons. Power tools can be dangerous in the hands of untrained users. Store the power tools in a dry and safe place.
- Keep the power tool in good condition. Check the adjustment of moving parts and their mobility. Check for any damage to the protective guards or other parts which could affect safe operation of the power tool. If damaged, have the power tool properly repaired before further use. Many accidents are caused by poorly maintained power tools.
- Keep cutting tools sharp and clean. Properly maintained cutting tools with sharp cutting edges facilitate work, reduce the risk of injury and are easier to control. Use of accessories other than those specified in the instructions for use could result in damage to the power tool and cause injuries.
- Use the power tool, accessories and tool bits etc. in accordance with these instructions and in the manner intended for the particular type of power tool taking into account the working conditions and the work to be performed. Use of the power tool for purposes other than those the power tool was intended for could result in hazardous situations.

Use of Cordless Power Tools

- Before inserting the battery, make sure the switch is in the “0-OFF” position. Inserting a battery into a switched-on power tool could result in hazardous situations.
- Charge batteries only using the chargers prescribed by the manufacturer. Using a charger intended for other battery type could result in its damage and occurrence of fire.
- Use only batteries intended for particular power tool. Use of different batteries could cause injury or occurrence of fire.
- If the battery is not used, keep it separately from metal objects such as clamps, keys, bolts and other small metal items which could cause connection of one battery contact with the other. Short-circuiting the battery could result in injury, burns or occurrence of fire.

- Handle the batteries with care. Rough handling could result in leak of chemical substance from the battery. Avoid contact with such substance and if, nonetheless, any contact occurs wash the affected area under running water. If eyes get into contact with the chemical substance seek immediately medical aid. Chemical substance from the battery can cause serious injuries.

Service

- Do not replace parts of the power tool, do not make any repairs or interfere in any way with the construction of the power tool. Have your power tool repaired by qualified repair persons.
- Any repair or modification of the product without our company's authorisation is impermissible (it could cause injury or damage to the user).
- Always have your power tool repaired in a certified service centre. Use only original or recommended replacement parts. This will ensure that your safety and the safety of your power tool is maintained.

2. SYMBOLS

The product complies with the applicable standards and regulations.

Read the Instruction Manual attentively prior to use.

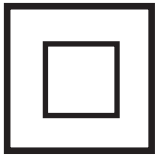

Double-insulated.

Use eyes protective equipment

Use ears protective equipment

Subjected to recycling

3. MACHINE DESCRIPTION AND ITEMS DELIVERED

Machine Description (See fig. 1)

1 - ON/OFF switch
2 - Lock button
3 - Chuck
4 - Handle
5 - Rotary speed selector
6 - Ventilation apertures
7 - Power cord

Items Delivered

Remove all contents from the box and inspect to ensure no damage was incurred during shipping, and that the items listed below are included.:

- Hammer drill
- 3 drills and 2 chisels
- Warranty card
- Instruction Manual

Should the components be missing or damaged, contact the dealer of the machine.

4. ADJUSTMENT AND OPERATION

- **EQUIPMENT PROTECTION**
  Incorrect operation can lead to damage. Therefore always observe the following regulations.
  Sharp drill bits optimize performance , minimizing wear on the drill.
  Do not place such loads on the drill that it ceases to turn.
  This drill has not got revere direction
  Use only genuine accessories.
  The power supply voltage must match the information quoted on the tool identification plate.

- **OPERATING INSTRUCTIONS**
  Familiarize yourself with the Rotary Hammer Drill before use.

- **CAUTION**
  Make sure the drill is isolated from the mains supply before fitting accessories.
  Attach the handle as shown in fig 1 depending on being left handed or right handed.

- **SWITCHING THE DRILL ON AND OFF**
  The drill has a On\Off switch (fig2) built in to the handle. Holding the drill with both hands simply squeeze the trigger and the motor will start.
  To switch off simply release the trigger.

- **DRILL SETTING FOR WOOD AND METAL**
  Locate the dial on top of the drill (fig3). Note the symbols indicate hammer action and drilling.
  The other symbol is chisel action only (fig4).
  For drilling metal and wood select the drill and hammer symbol (fig3). Select by turning in either direction until the aligns with the arrow on the drill casting.

  Located the larger lever selector to the rear of the drill near the On/Off switch (fig 5&6).
  Turn the selector lever to the drill only symbol .
  Normal drilling can be undertaken in this position.

HAMMER ACTION
Simply rotate the rear lever to the drill/hammer symbol .

CHISELLING ACTION
Locate the dial on top of the drill and rotate it until the large hammer symbol" "aligns with the arrow on the drill casing(fig4).
Locate the large lever to the rear of the drill (fig5) near the On/Off switch. Turn the selector lever to the hammer and drill symbol.

INSERTING CHISELS BITS INTO THE QUICK RELEASE SDS
The chisel bits have slots in the shank. These locate with tabs in the drill.
Grip and pull back the black shrouding and insert the chisel shank.(fig7).
Push inwards until a resistance is felt.
It may be necessary to spin the chisel until the shaft drops completely in to place.
Once you are satisfied it has seated release the black shroud. This should lock the chisel into position (fig8).

NOTE
The chisel will be gripped firmly by its shank and will not be able to be removed. If the chisel is not located, repeat the installation operation again.

USING THE DEPTH GAUGE
Locate the depth gauge in the case. Insert in to the handle.
After tightening the drill bit offer the tip up to the work piece.
Back off the depth gauge and measure the required depth from the work piece to the tip of the depth gauge.

SAFETY WHEN USING THE ROTARY DRILL
It is a powerful drill. Caution needs to be observed when operating.
Dress in suitable overalls.
Safety boots are recommended at all times especially when using the chisel actions.
Proper safety gloves are also recommended.

CAUTION
Care should be taken if asbestos is suspected of being drilled or chiseled.
This is highly dangerous to user and people in the vicinity and professional help should be sought for its removal and disposal.

CHISELS AND DRILL BITS
Inspect regularly drill bits for damage and sharpness. If in doubt obtain new chisels and bits from stockist.

5. TECHNICAL SPECIFICATIONS

Power supply..... 230V~ / 50Hz
Power input..... 1500W
Speed..... 0-900 /min
Protection class..... II
Maximum drilling capacity ..... dia. 32 mm
Power supply cable length..... 2 m
Declared noise level: ..... 106,08 dB(A)
Vibration: ..... ah.D1 = 13.14 ms^{-2} , K = 1.5 ms^{-2}

Instructions Manual - language version only.

Amendments to text and technical parameters are reserved.

Changes in the text, design and technical specifi cations may change without prior notice and we reserve the right to make these changes.keep it from turning as the drill bit rotates.

Troubleshooting

Suspected malfunctions are often due to causes the user can fix themselves. Therefore check the product using this section .In most cases the problem can be solved quickly .

WARNING!

Only perform the steps described within these instructions! All further inspection , maintenance and repair work must be performed by an authorized service centre or a similarly qualified specialist if you cannot solve the problem yourself !

Problem	Possible Cause	Solution
1.Product does not start	1.1 Not connected to power supply 1.2 Power cord or plug is defective 1.3 Other electrical defect to the product	1.1 Connect to power supply 1.2 Check by a specialist electrician 1.3 Check by a specialist electrician
2.Product does not reach full power	2.1 Extension cord is not suitable for operation with this product . 2.2 Power source（e.g. generator）has too low voltage 2.3 Air vents are blocked	2.1 Use a proper extension cord 2.2 Connect to another power source
3.Unsatisfactory result	3.1 Drill is dull/damaged 3.2 Drill bit is not suitable for work piece material	3.1 Replace with new one 3.2 Use proper Drill
4.Excessive vibration or noise	4.1 Drill bit is dull/ damaged	4.1 Replace with a new one

6. DECLARATION OF CONFORMITY

Manufacturer:

FAST ČR, a.s.
Černokostelecká 1621, 251 01 Praha, Czech Republic Tax ID: CZ26726548

Product / brand: HAMMER DRILL/ FIELDMANN

Type / model: FDV 201501-E

230V/50Hz, 1500W,0-900rpm,32mm

The product is inline with directives and regulations listed below:
EC Council Directive 2006/42/EC Machinery
EC Directive for Electromagnetic Compatibility (EMC) No.2014/30/EU
EC Directive for RoHS 2011/65/EU

and standards:

- EN 60745-1:2009+A11
- EN 60745-2-1:2010

- EN 55014-1:2006+A1:2009+A2:2011
- EN 55014-2:2015
- EN 61000-3-2:2014
- EN 61000-3-3:2013
- EN 62321:2009

Place of issuance: Prage

Date of issuance: 23.8.2017

Name: Ing. Zdeněk Pech
Chairman of the Board

Signature:

FAST ČR, a.s.
Černokostelecká 1621, 251 01 Říčany
IČO: 26726548 tel.: +420/ 323 204 111
DIČ: CZ26726548 fax: +420/ 323 204 110

7. DISPOSAL

INSTRUCTIONS AND INFORMATION ON DISPOSAL OF USED PACKAGING.
Put any used package material to the place determined by the municipality for waste disposal.

DISPOSAL OF USED ELECTRIC AND ELECTRONIC EQUIPMENT

This symbol on products or accompanying documents means that used electric or electronic products must not be put to ordinary municipal waste. Hand over such products to determined collection points for proper disposal, restoration and recycling. Alternatively, in some countries of the European Union or other European countries you can return your products to your local dealer when you buy an equivalent new product. By dutiful disposal of this product you can preserve precious natural resources and you help prevent any potential adverse effects on the environment and human health which could be the results of wrong waste disposal. Ask your local authority or the nearest collection point for additional details. In case of improper disposal of this waste kind penalties can be imposed in accordance with national regulations.

For companies in the European Union countries
Should you want to dispose of electric and electronic devices, ask your dealer or vendor for necessary information.

Disposal in other countries outside the European Union
Should you want to dispose of this product, ask your local authorities or your dealer for necessary information about disposal method.

This product fulfils all basic requirements of the EU directives that apply to it.

Text, design and technical specifications can change without prior notice and we reserve the right for their change.